Building plan Rover

Ruud Tilburgs

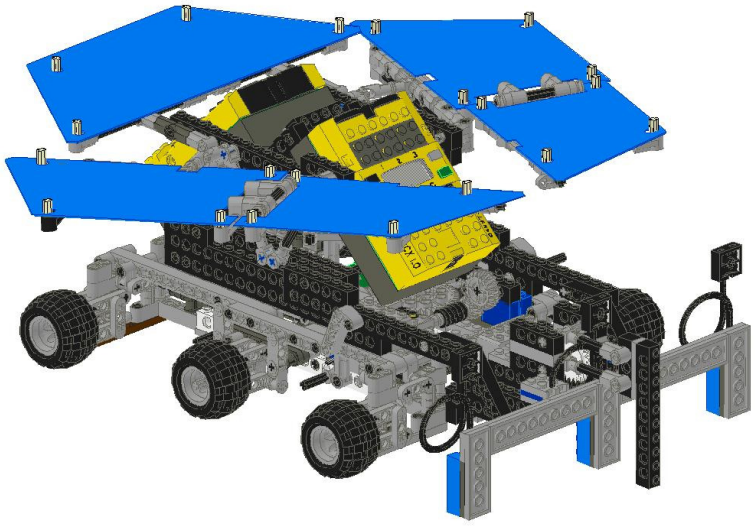

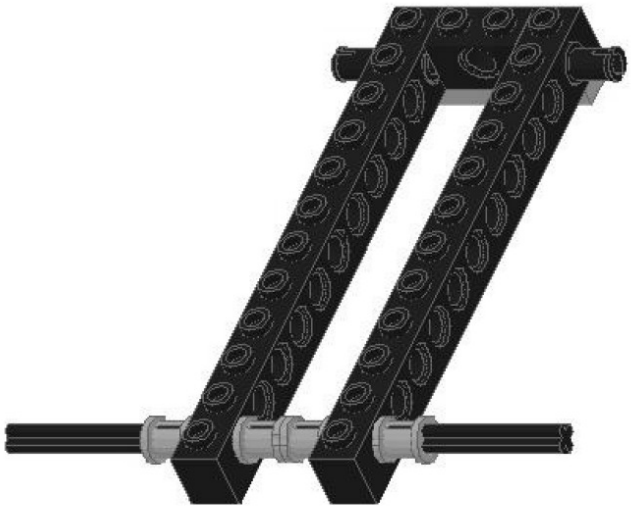

Step 1

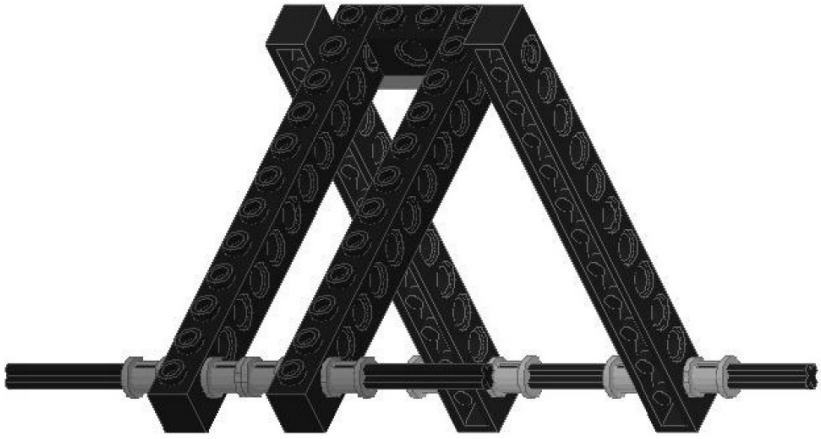

Step 2

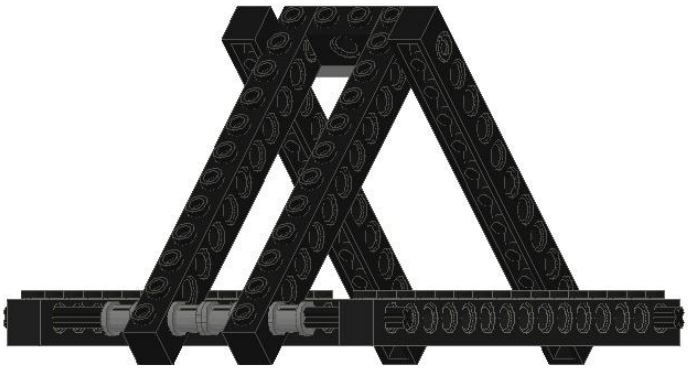

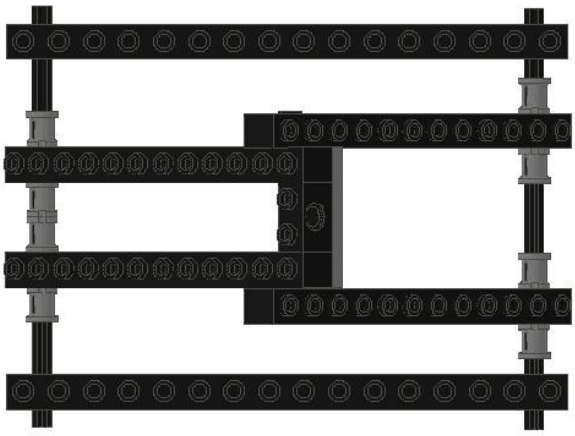

Step 3

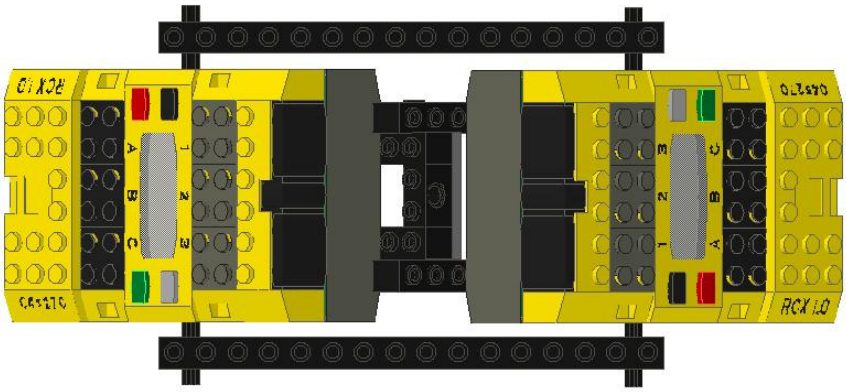

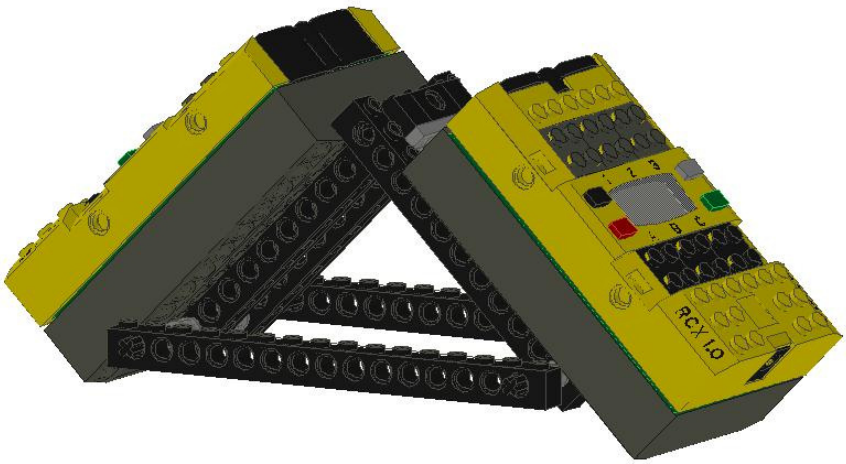

Step 4

Step 5

Step 6

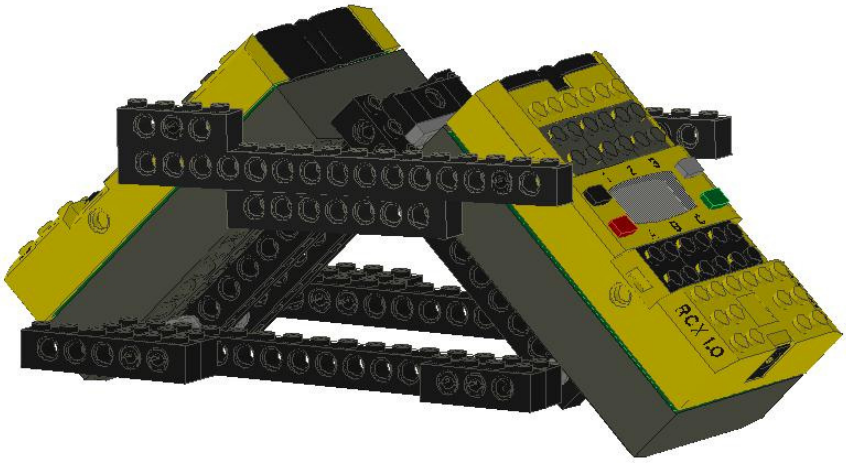

Step 7

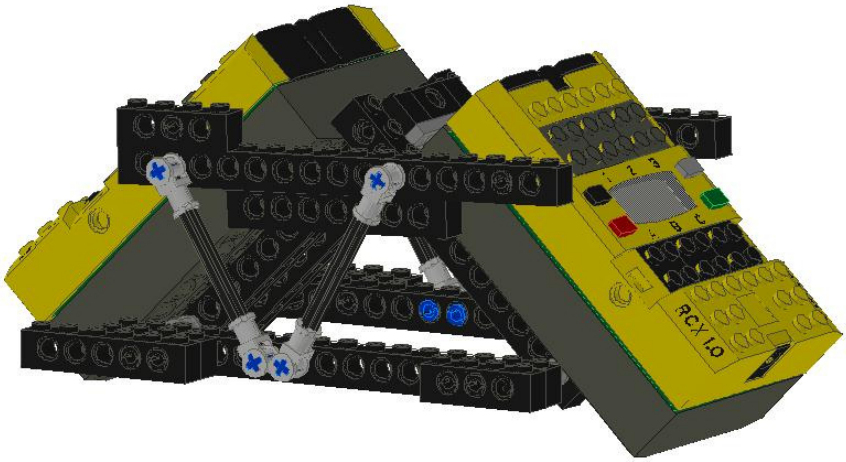

Step 8

Step 9

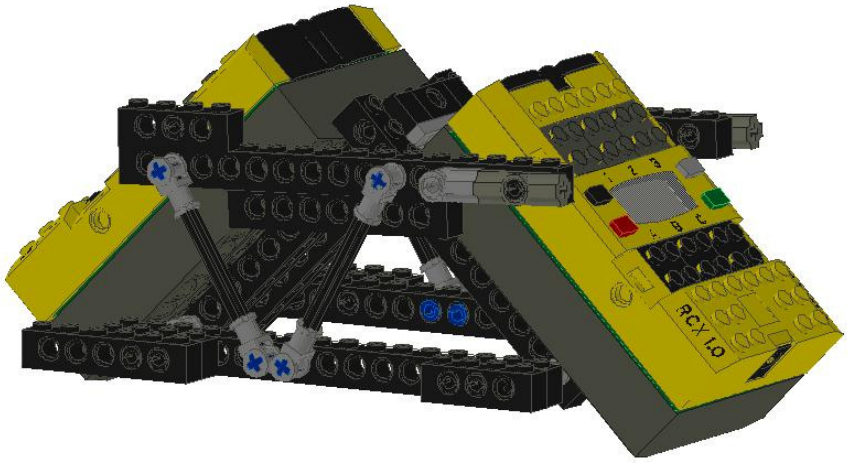

Step 10

Step 1

Step 2

Step 3

Step 1

Step 2

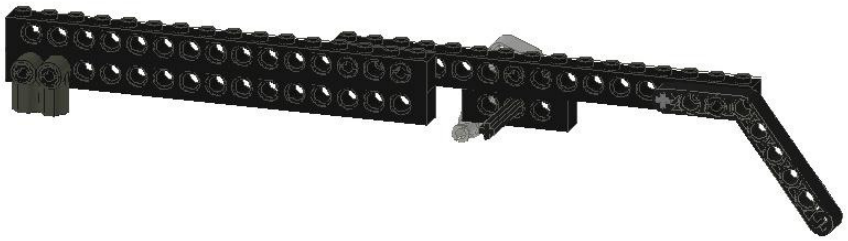

Step 3

Step 4

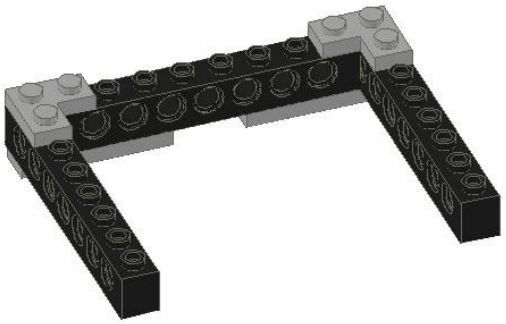

Step 1

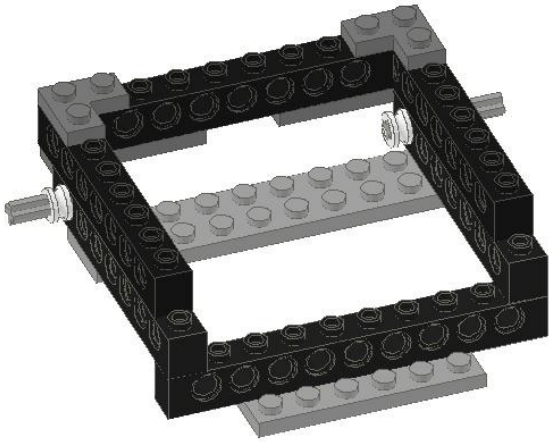

Step 2

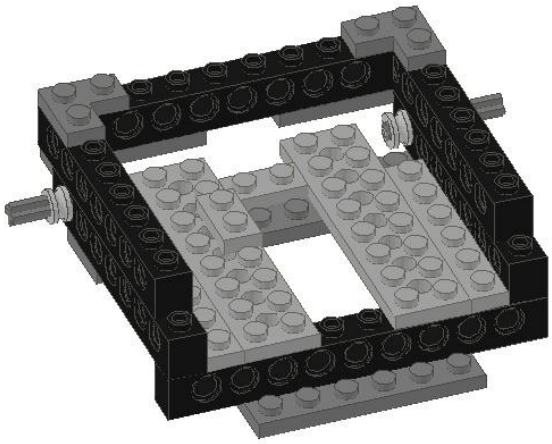

Step 3

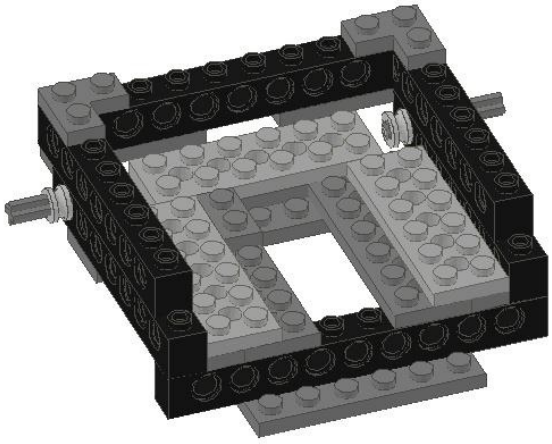

Step 4

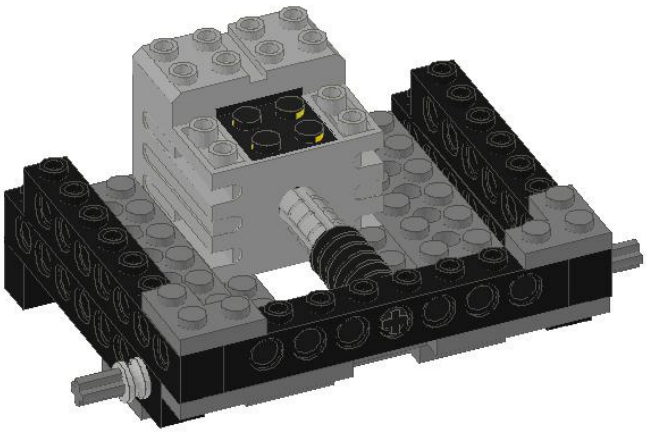

Step 5

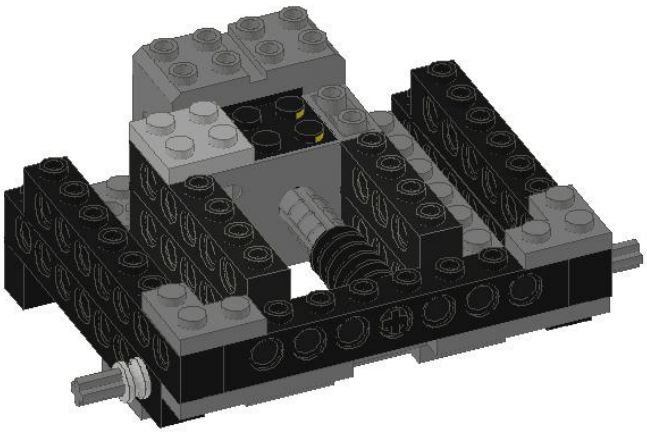

Step 6

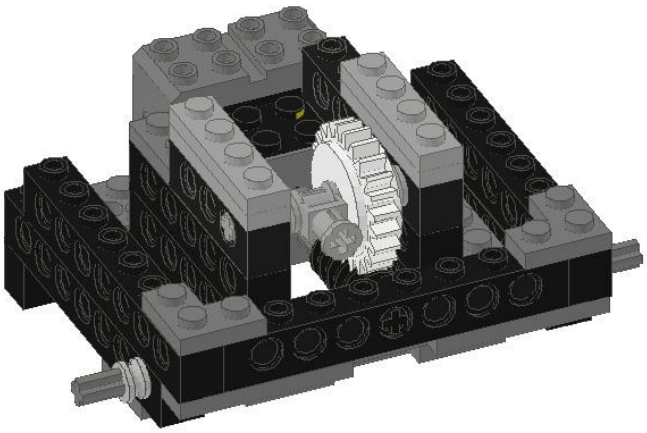

Step 7

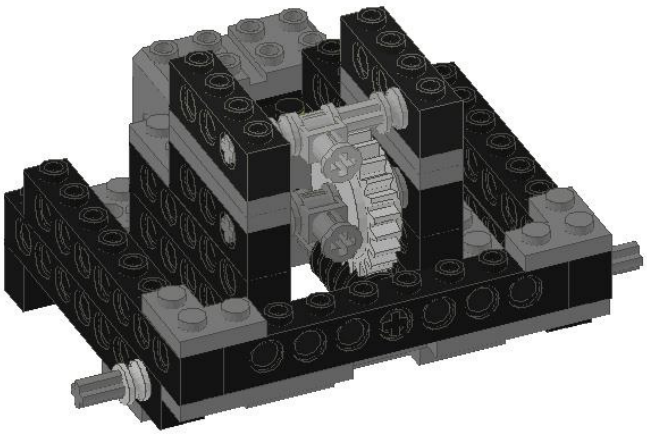

Step 8

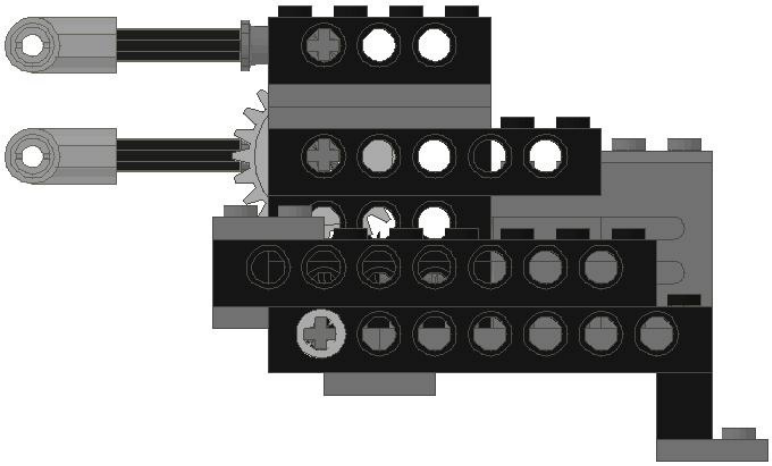

Step 9

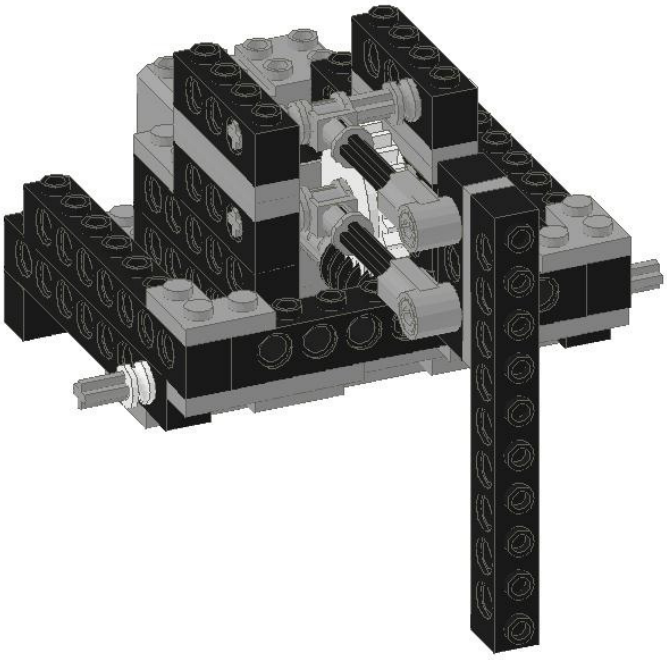

Step 10

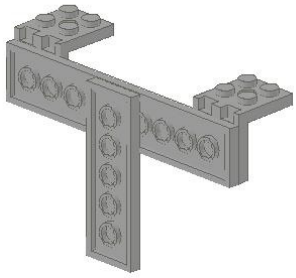

Step 1

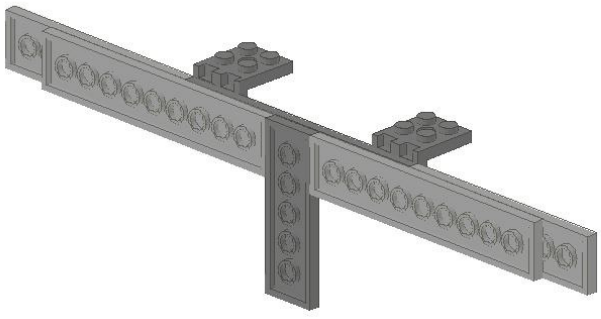

Step 2

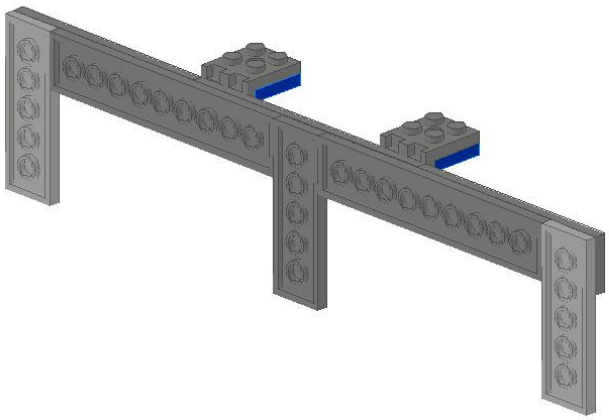

Step 3

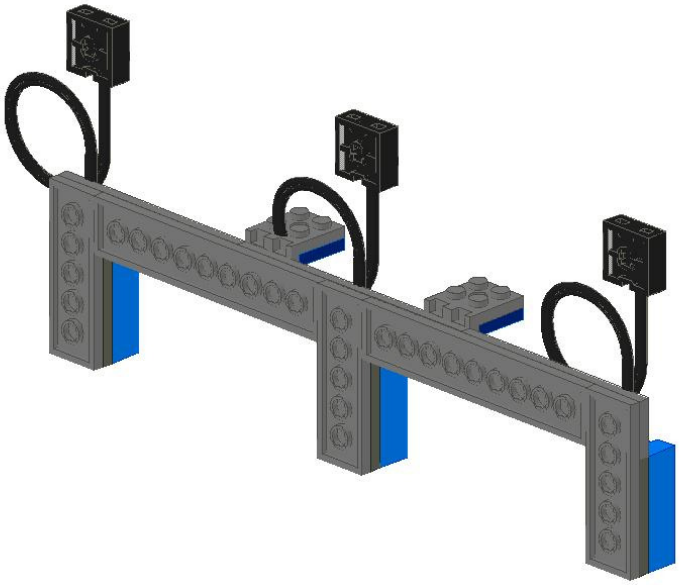

Step 4

Step 1

Step 2

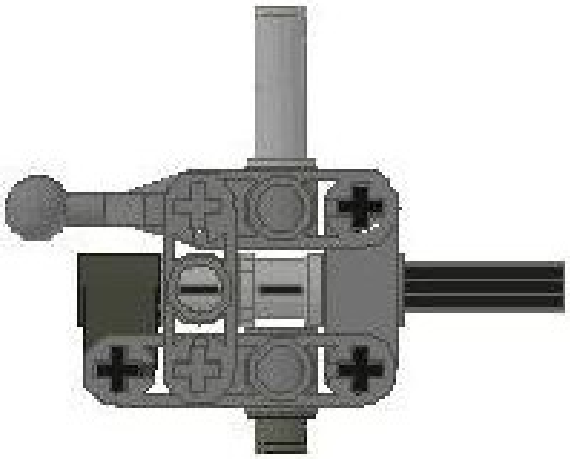

Step 3

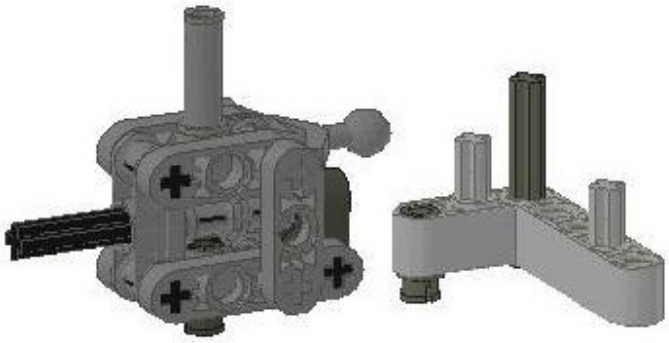

Step 4

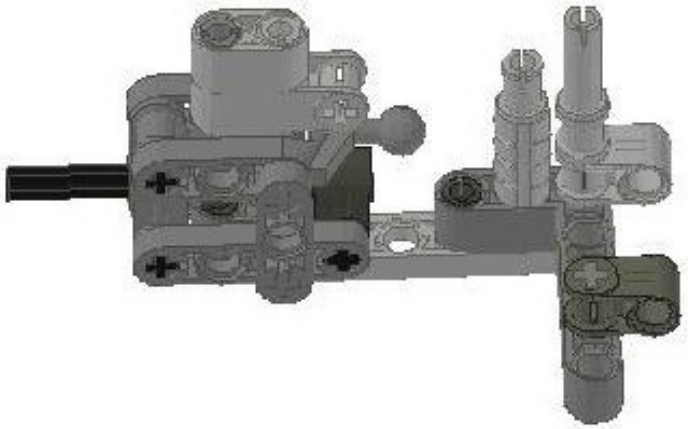

Step 5

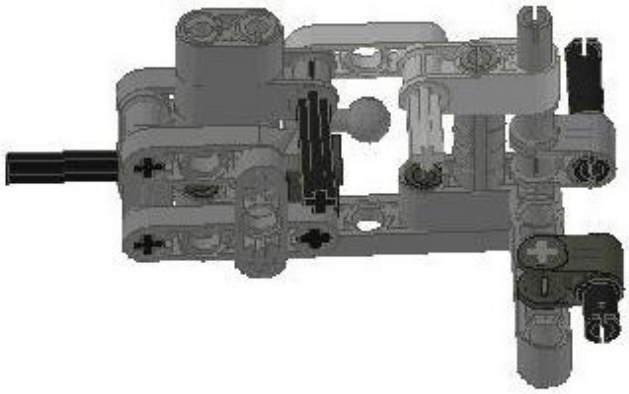

Step 6

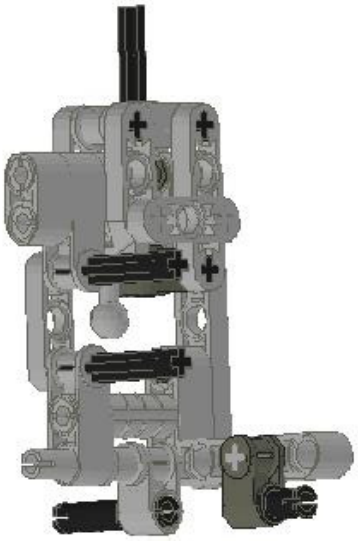

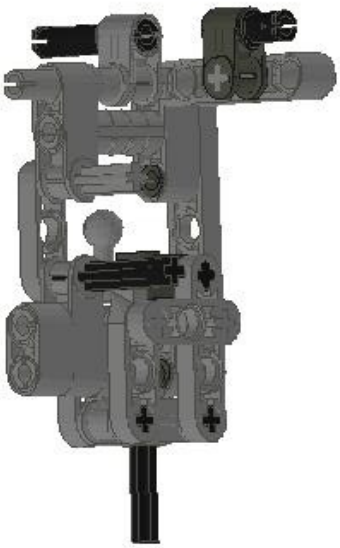

Step 7

Step 8

Step 9

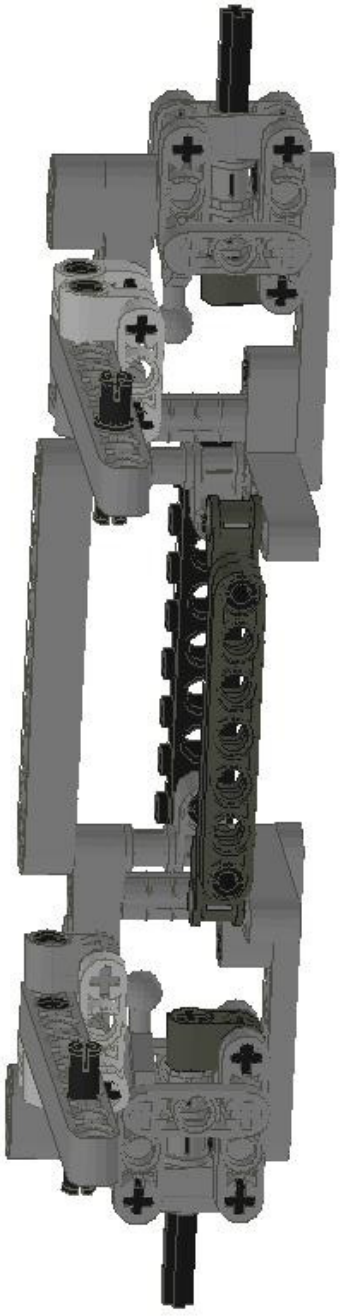

Step 10

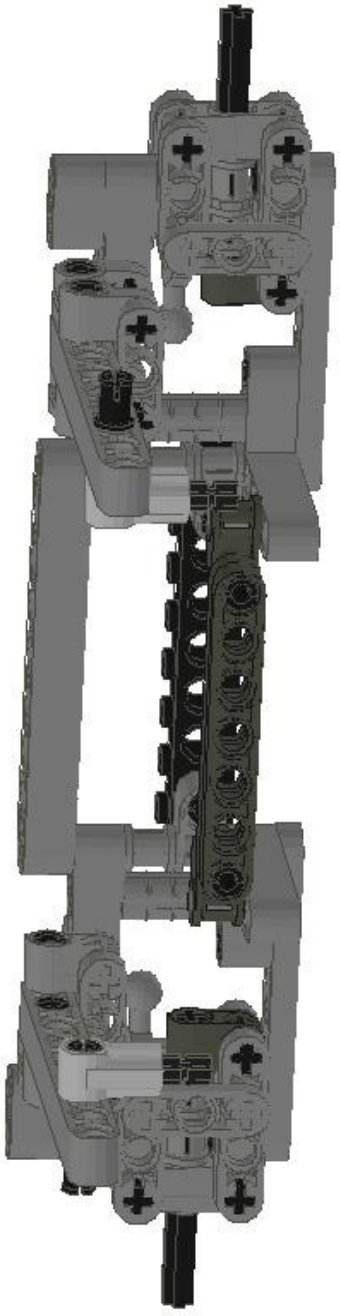

Step 11

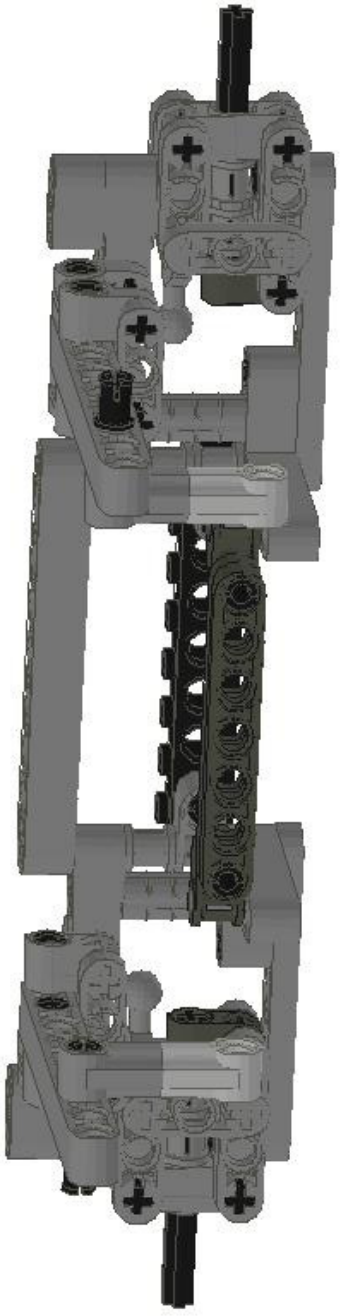

Step 12

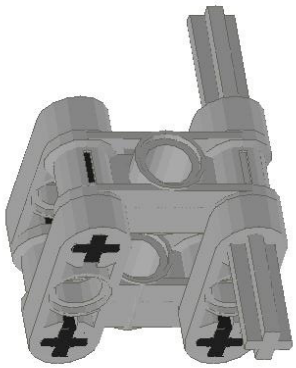

Step 1

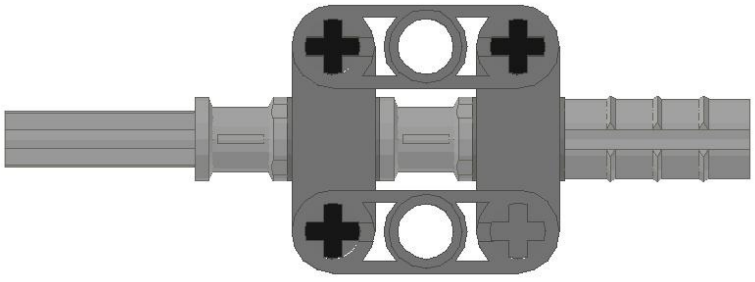

Step 2

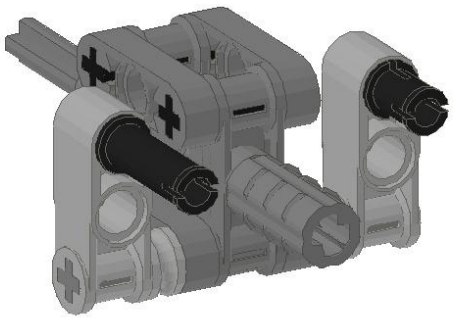

Step 3

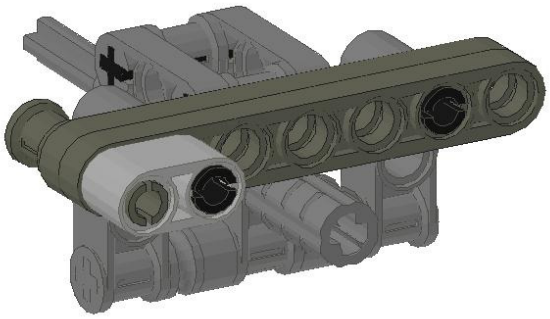

Step 4

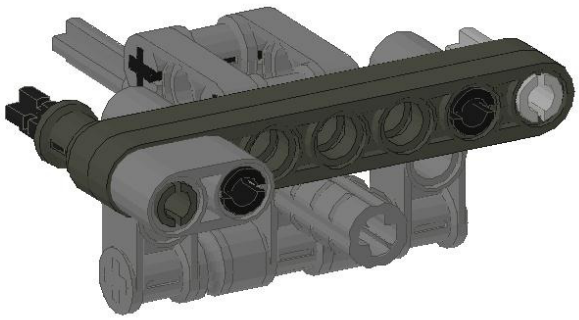

Step 5

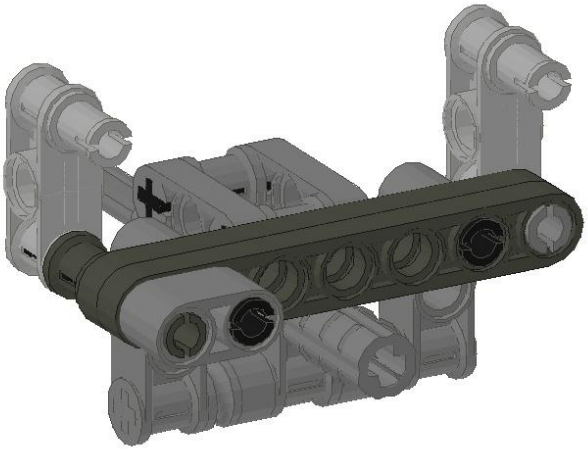

Step 6

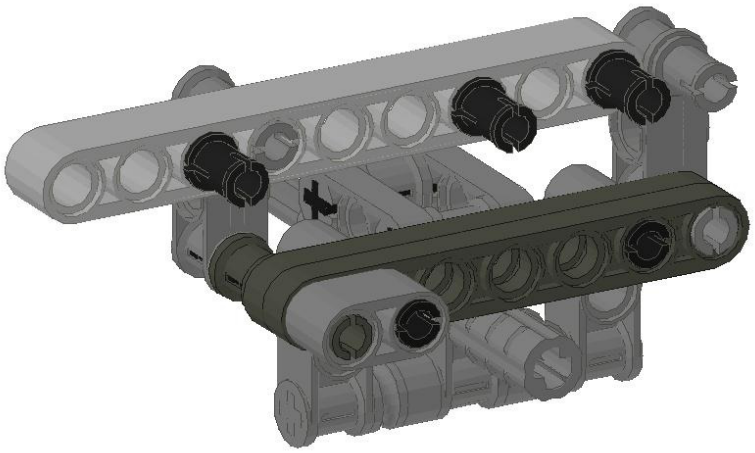

Step 7

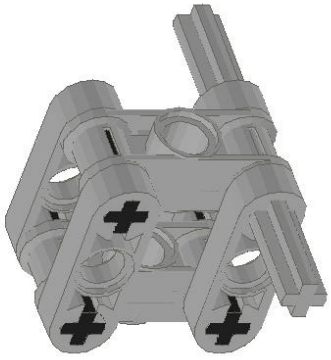

Step 1

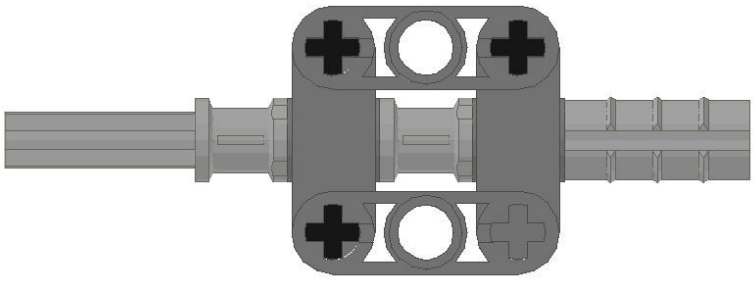

Step 2

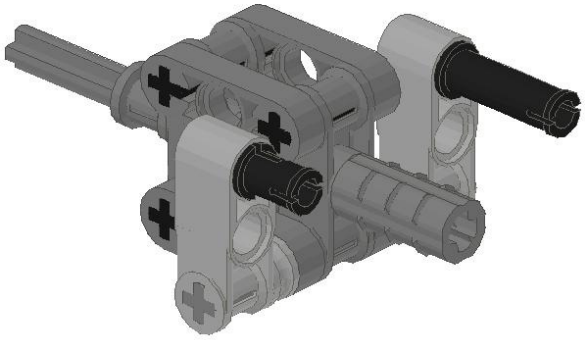

Step 3

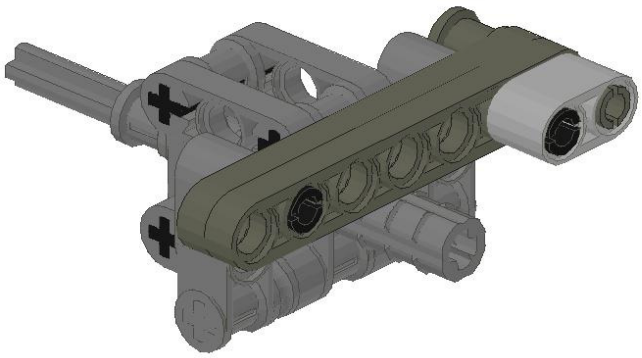

Step 4

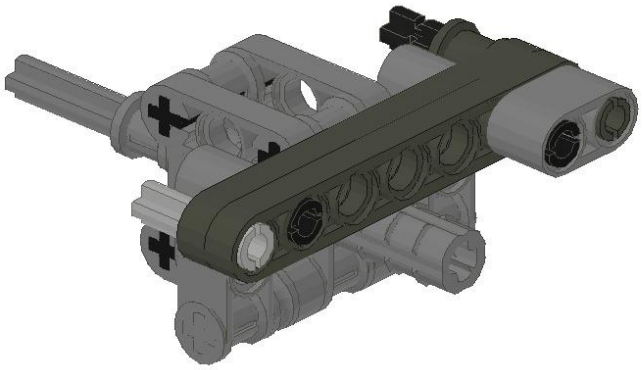

Step 5

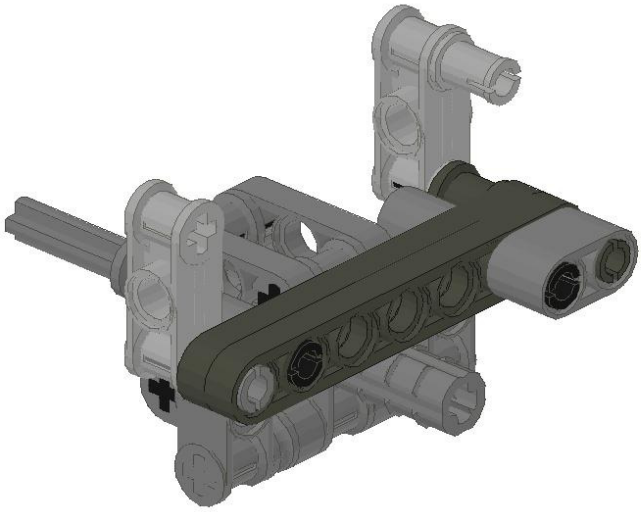

Step 6

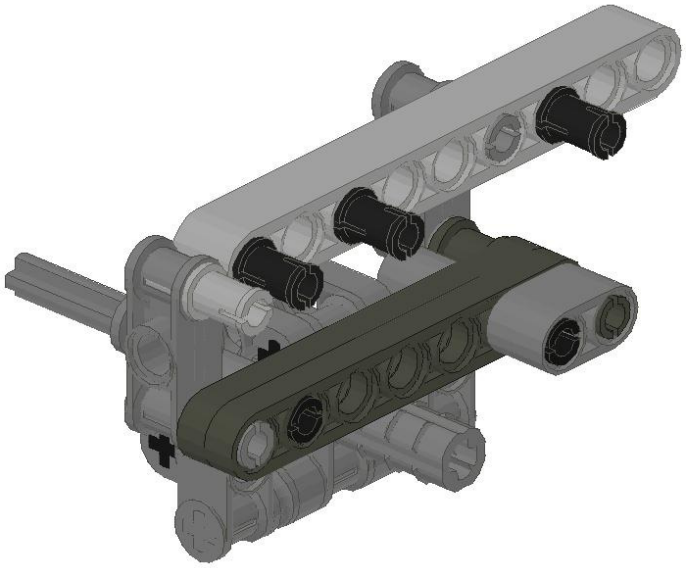

Step 7

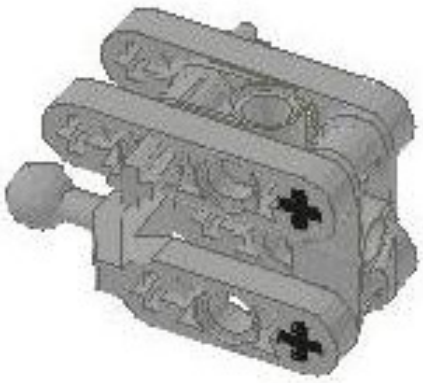

Step 1

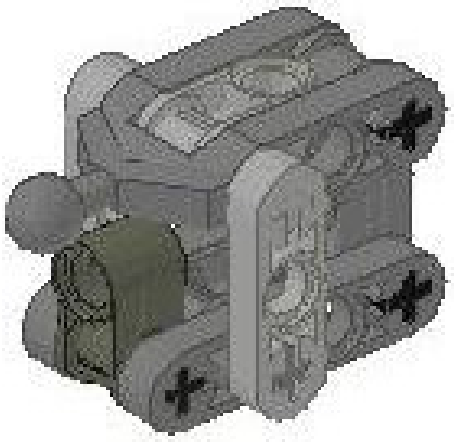

Step 2

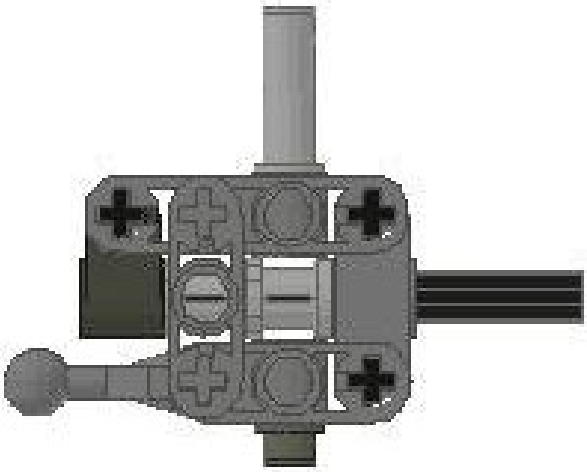

Step 3

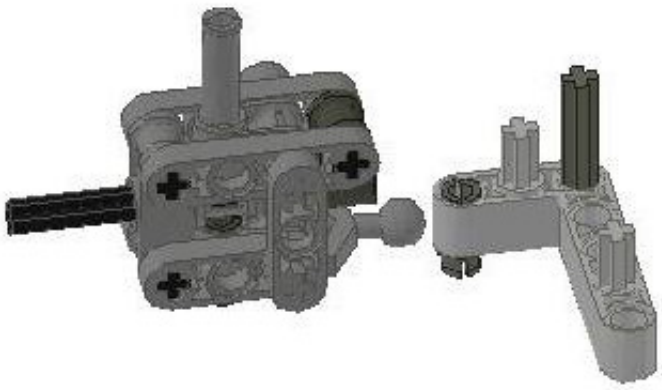

Step 4

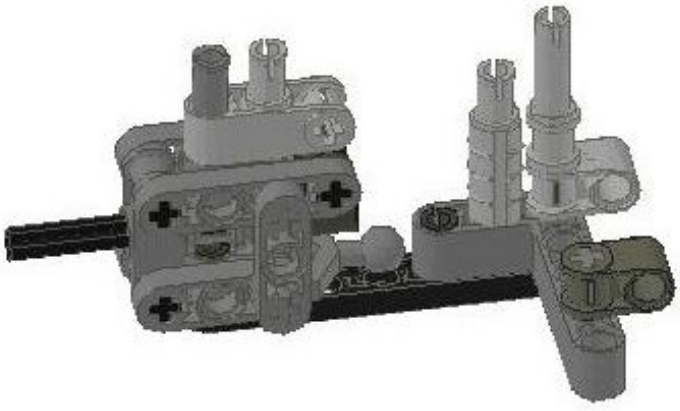

Step 5

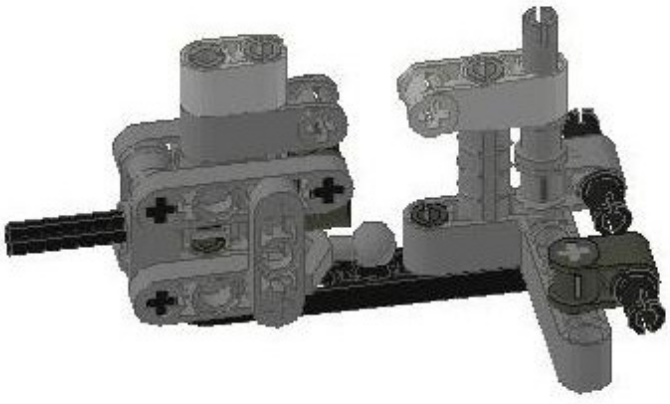

Step 6

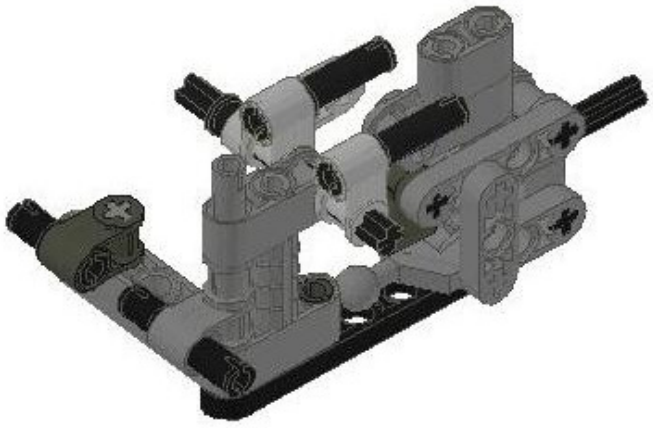

Step 7

Step 8

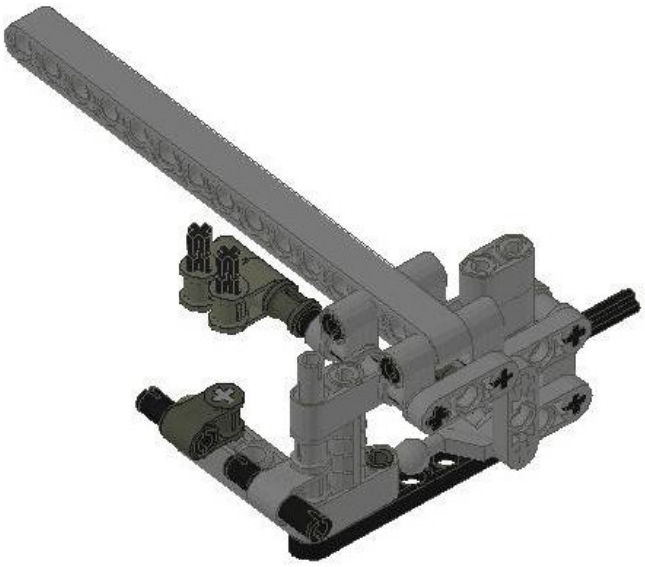

Step 9

Step 10

Step 11

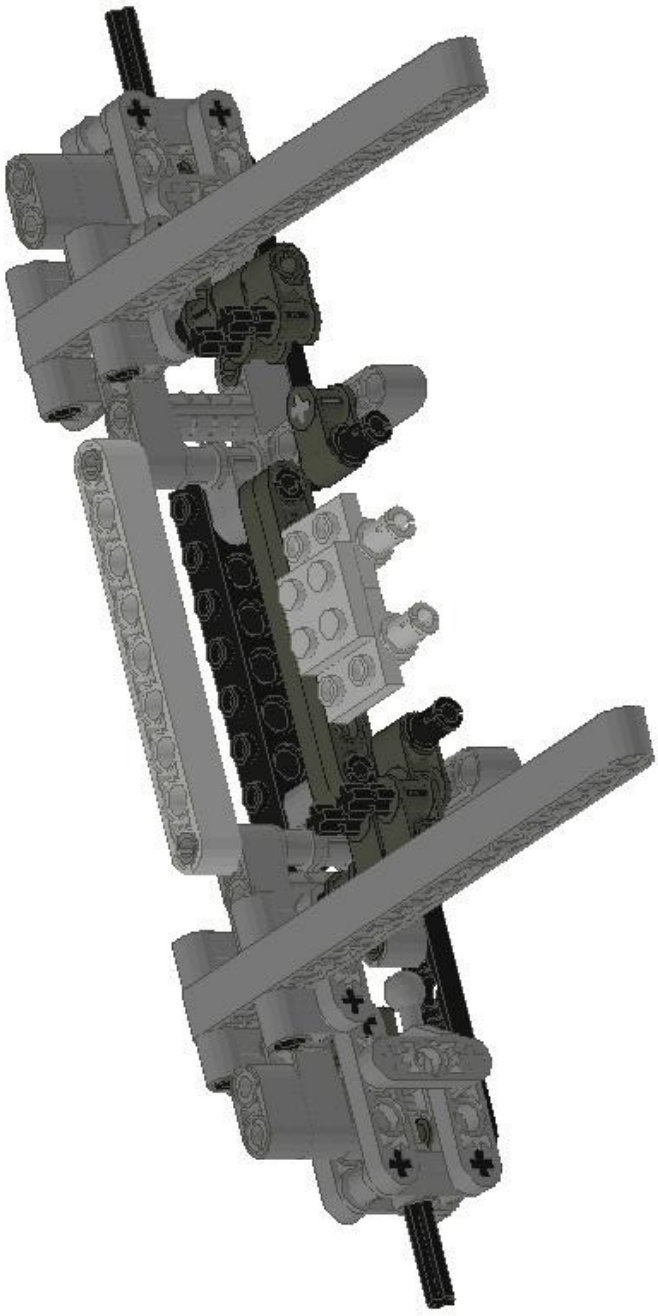

Step 12

Step 13

Step 14

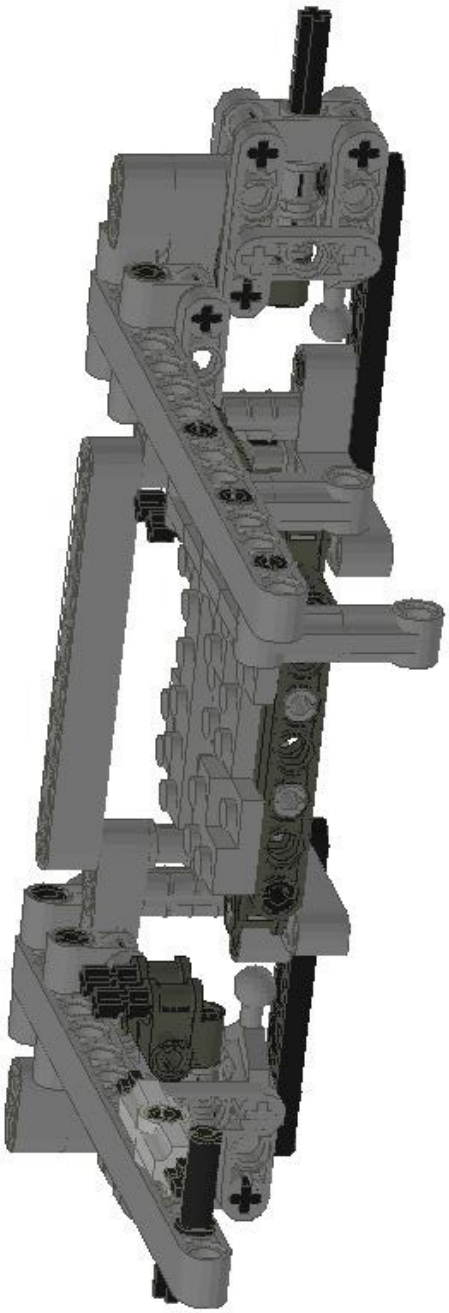

Step 15

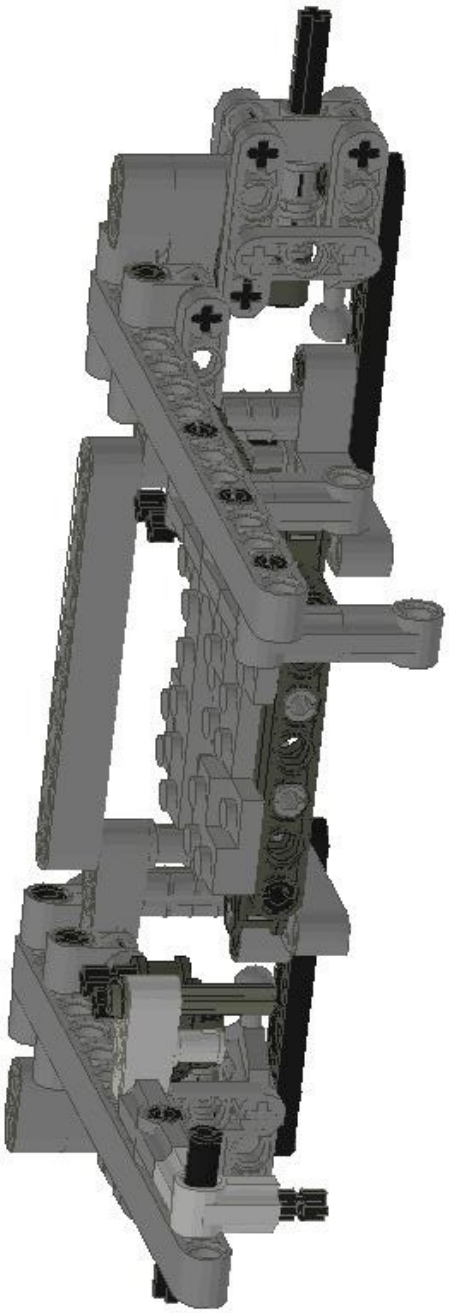

Step 16

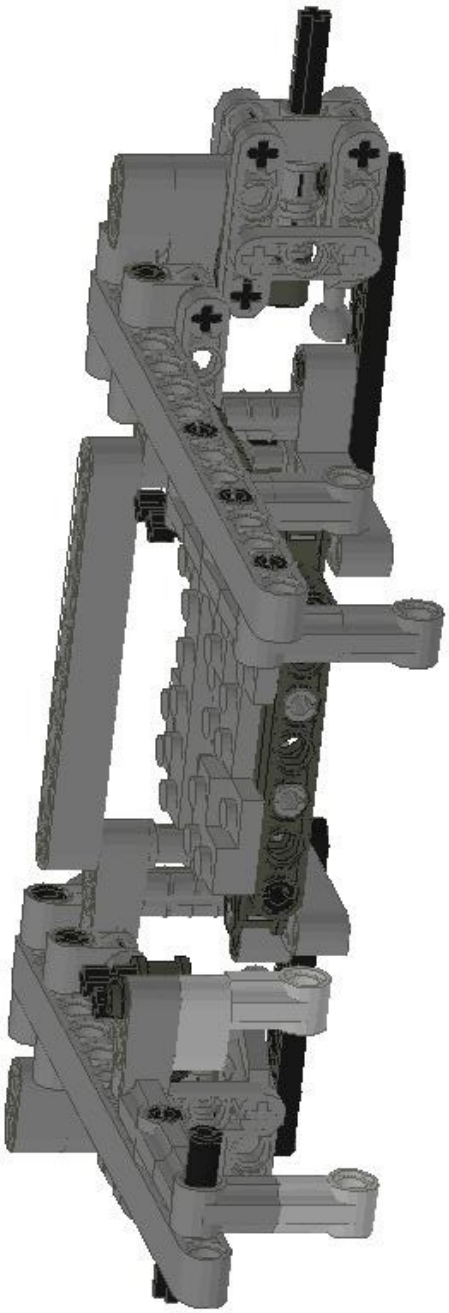

Step 17

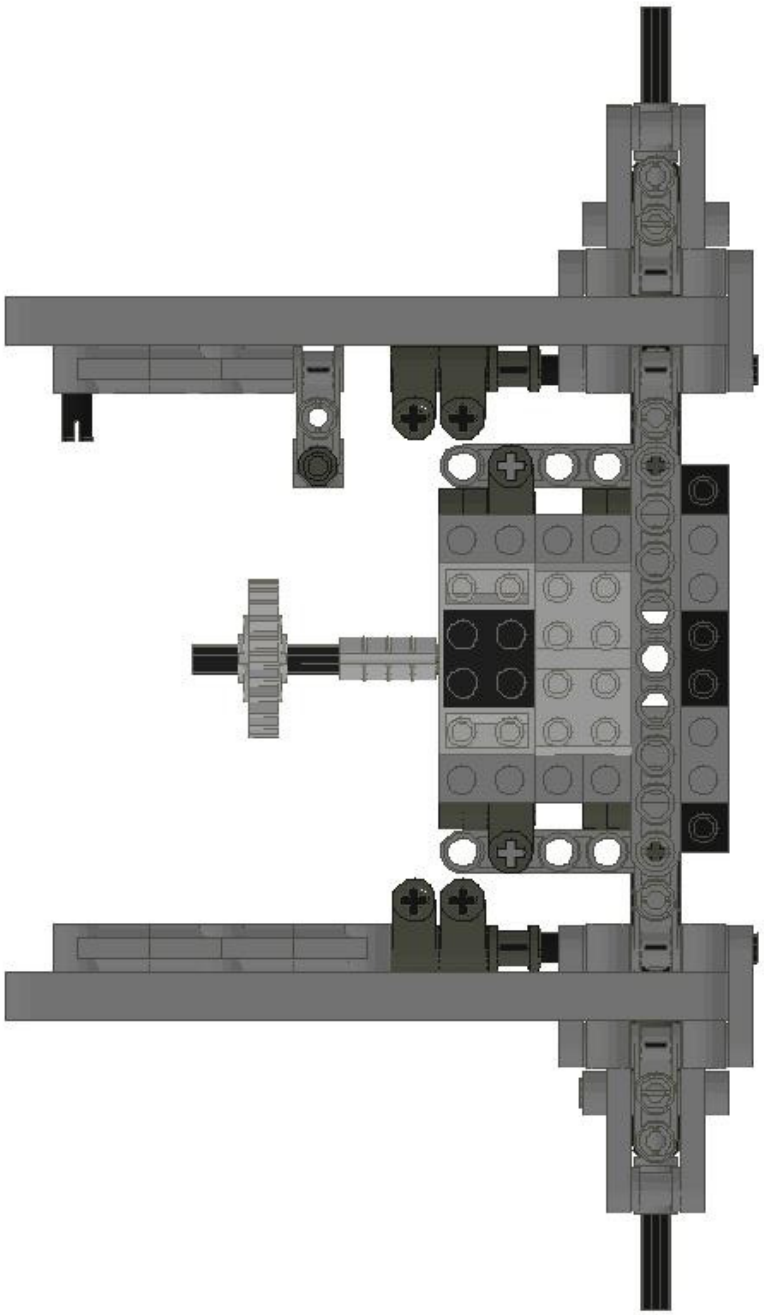

Step 18

Step 1

Step 2

Step 3

Step 4

Step 5

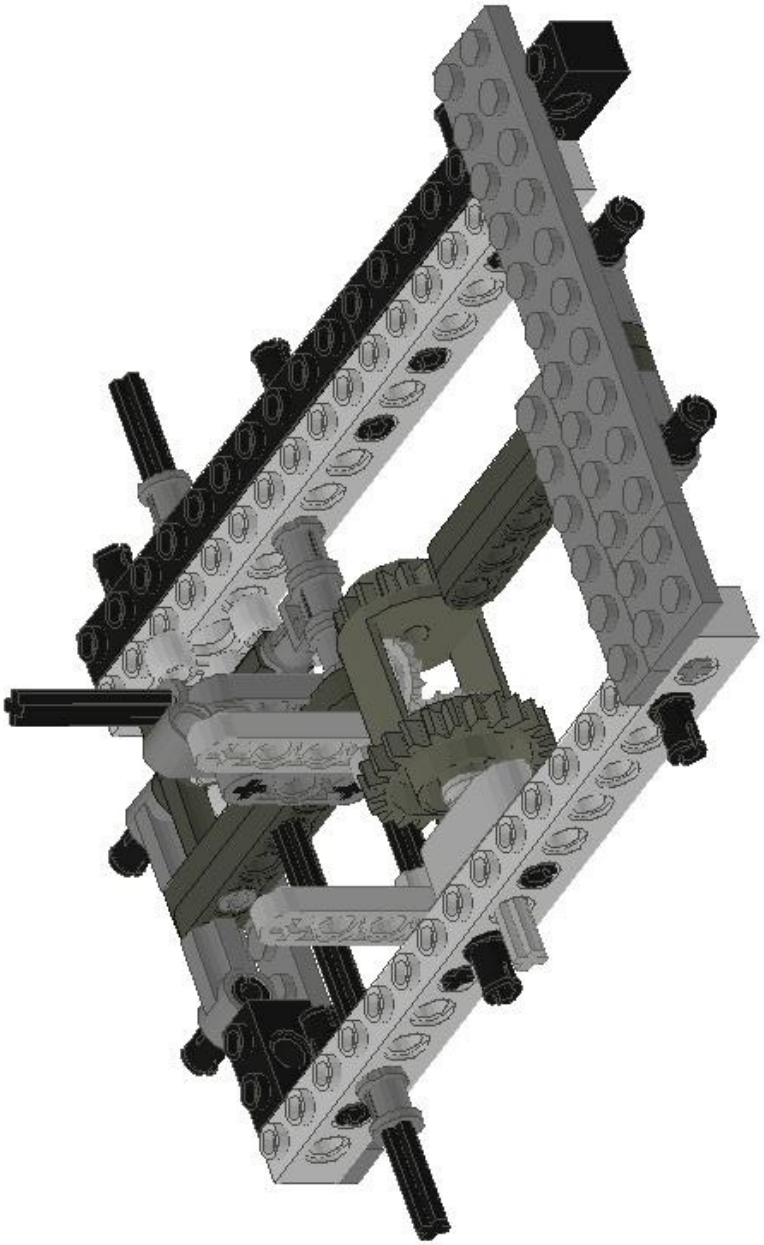

Step 6

Step 7

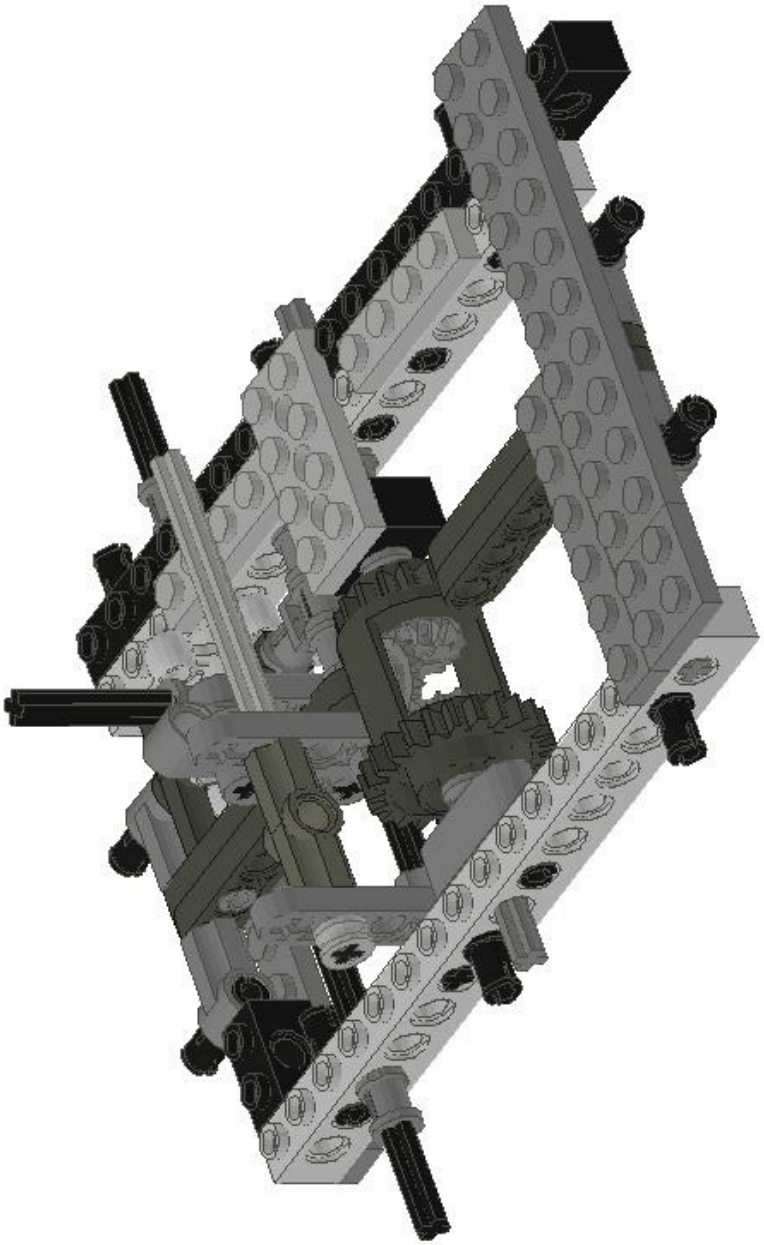

Step 8

Step 9

Step 10

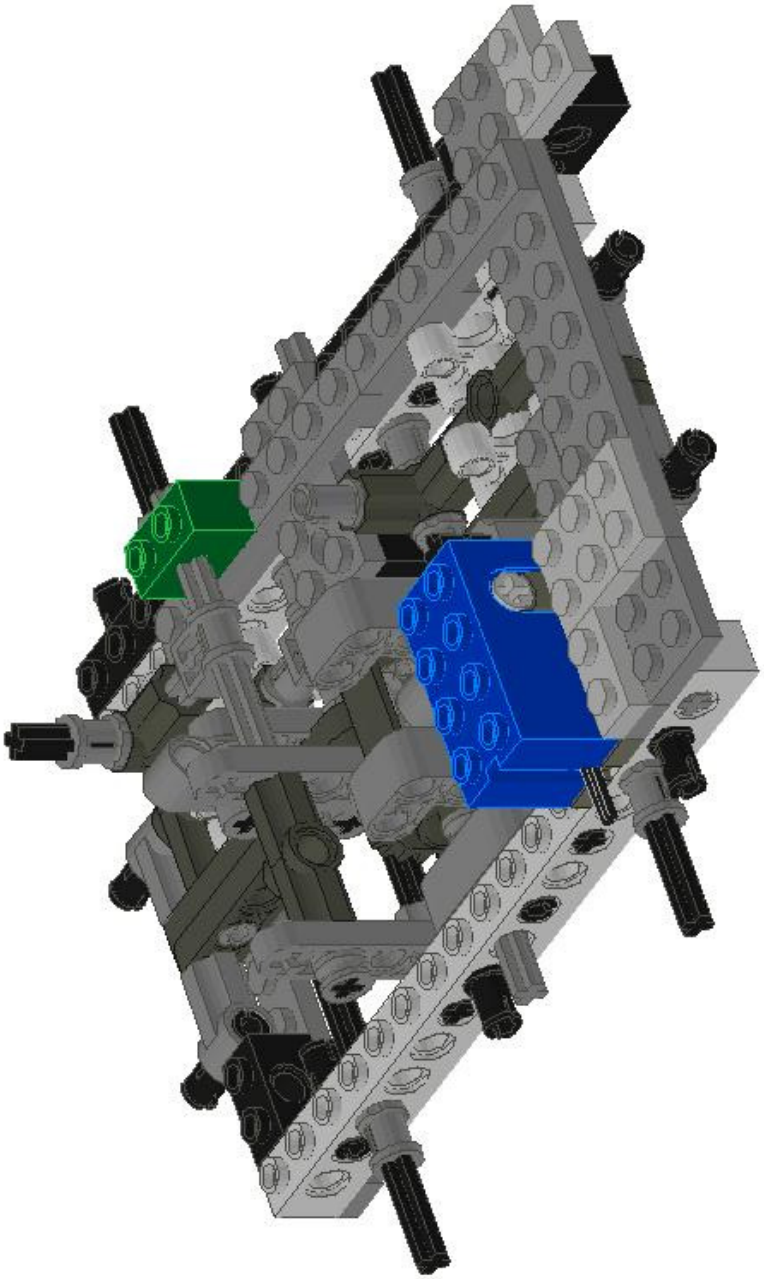

Step 11

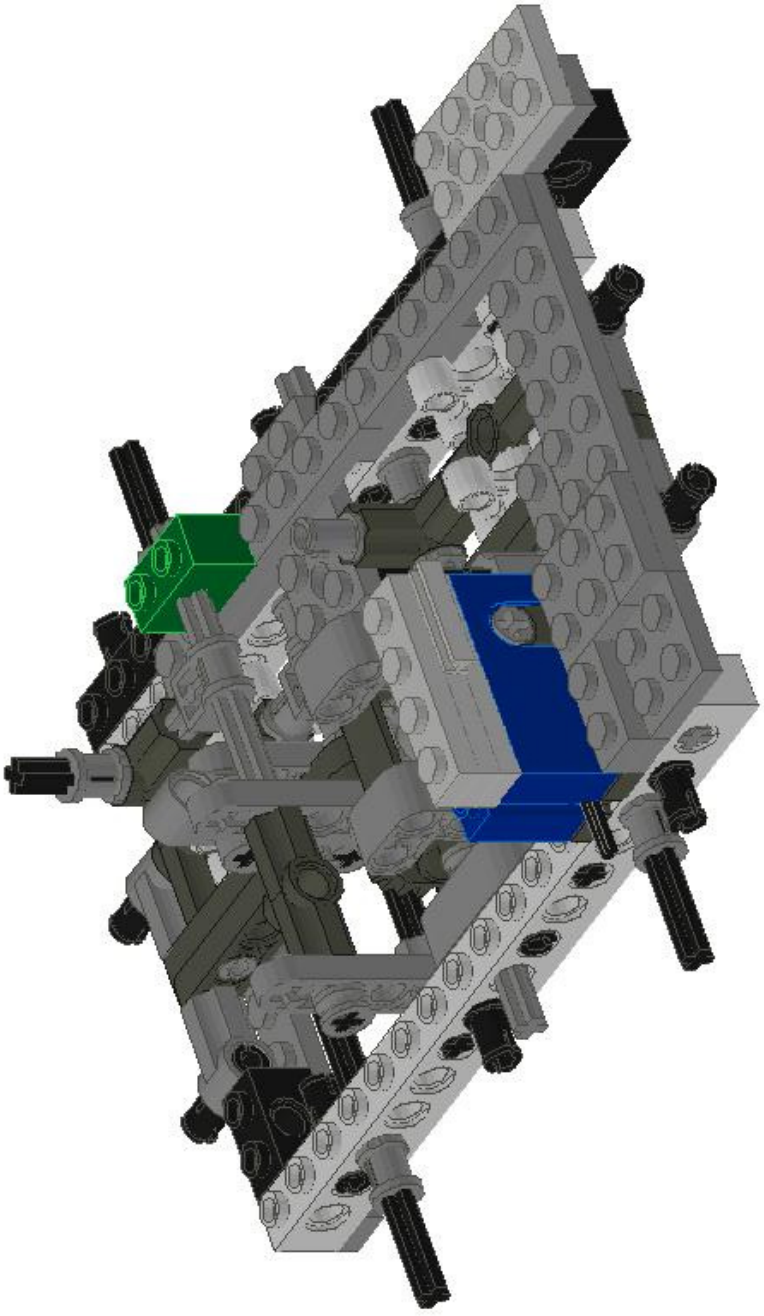

Step 12

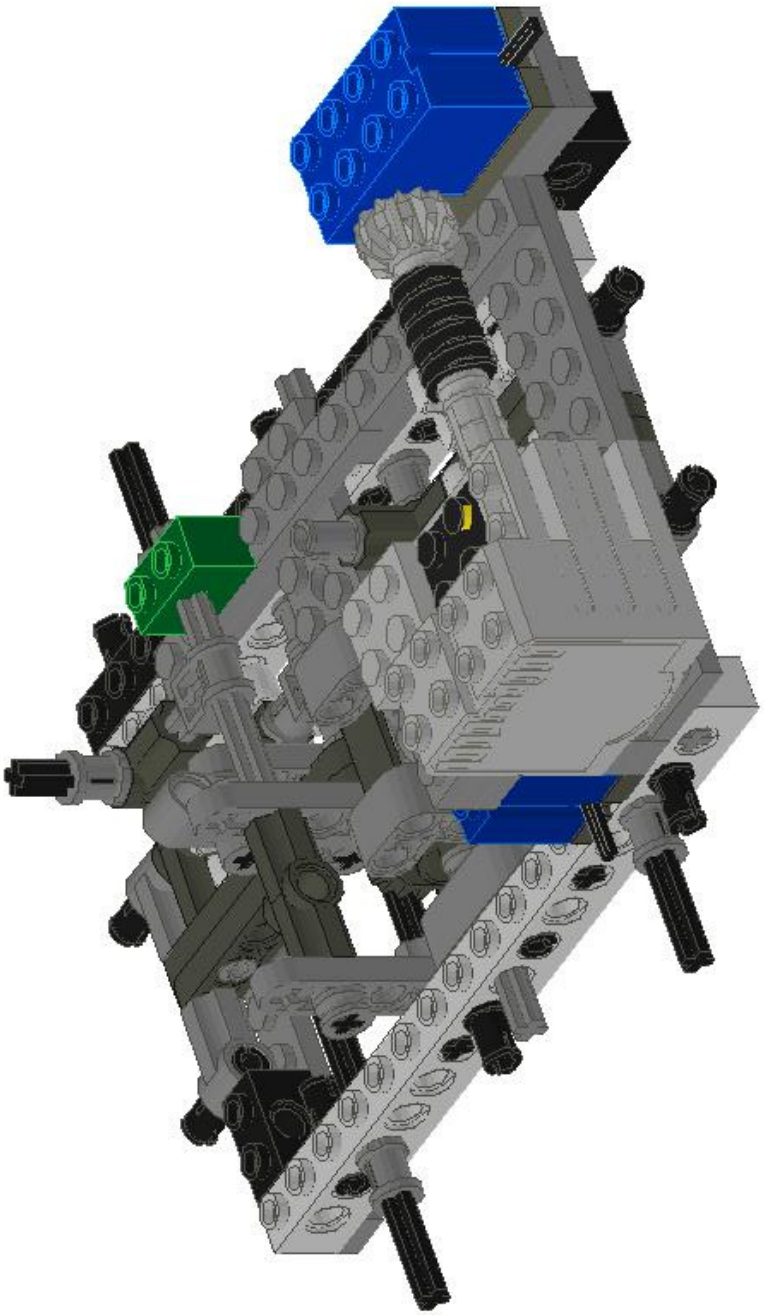

Step 13

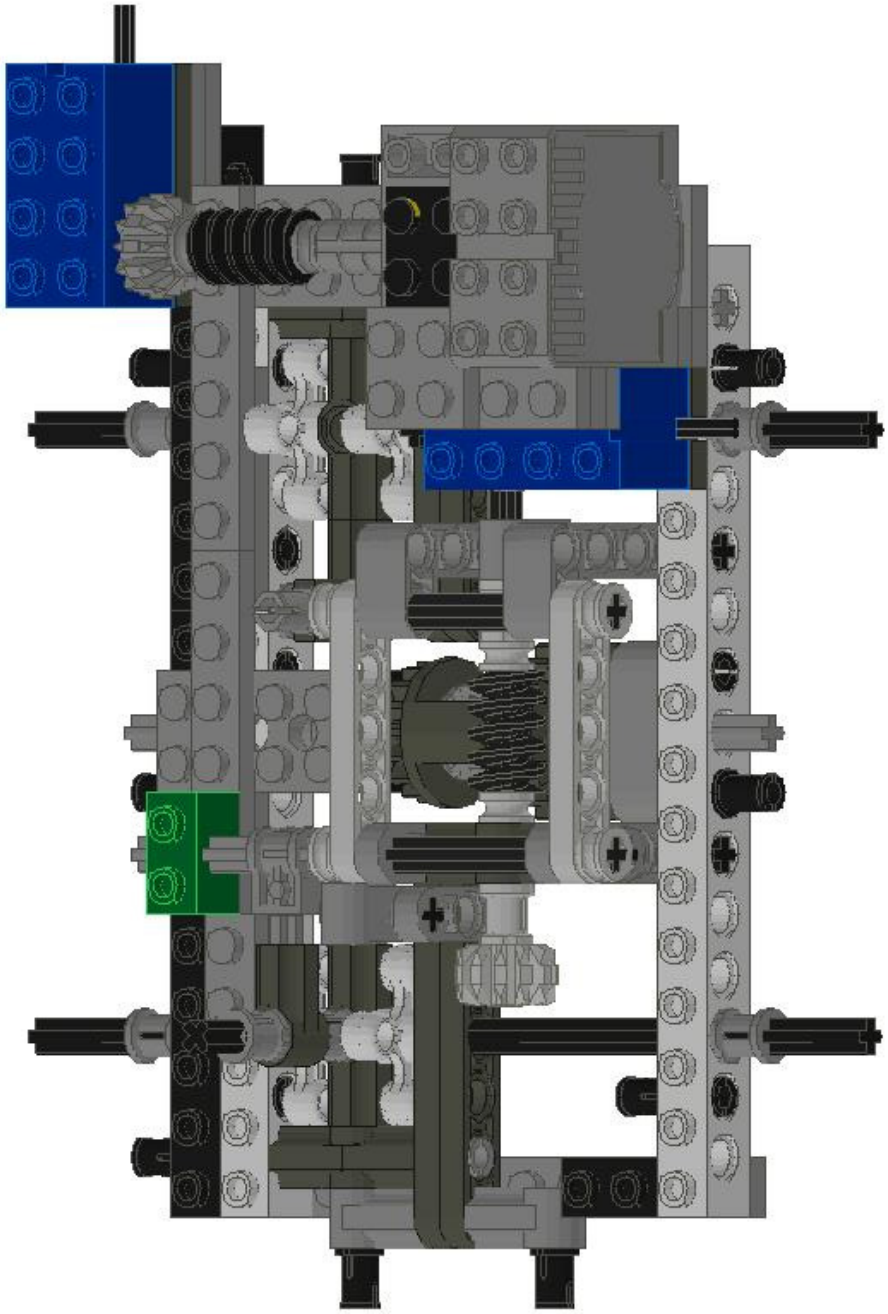

Step 14

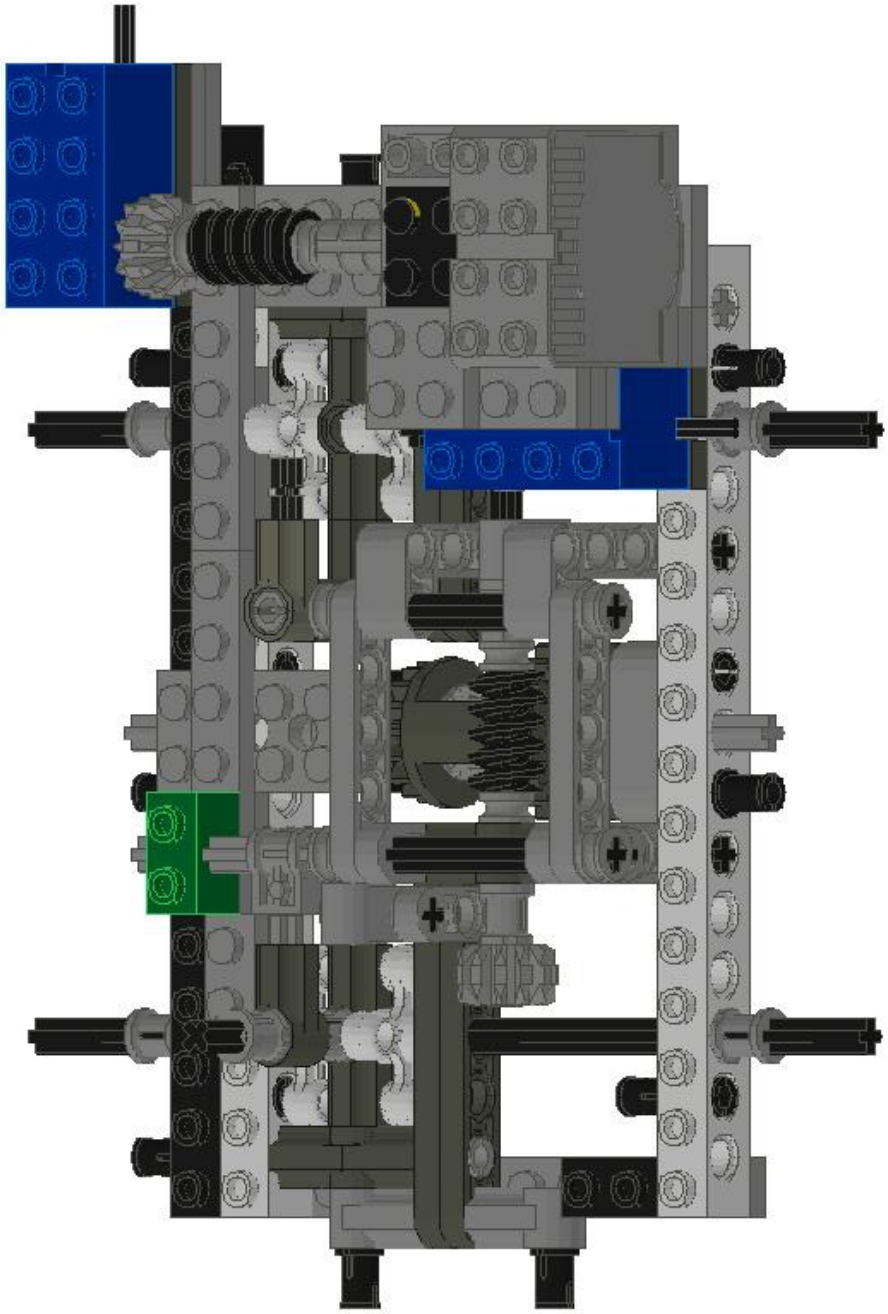

Step 14

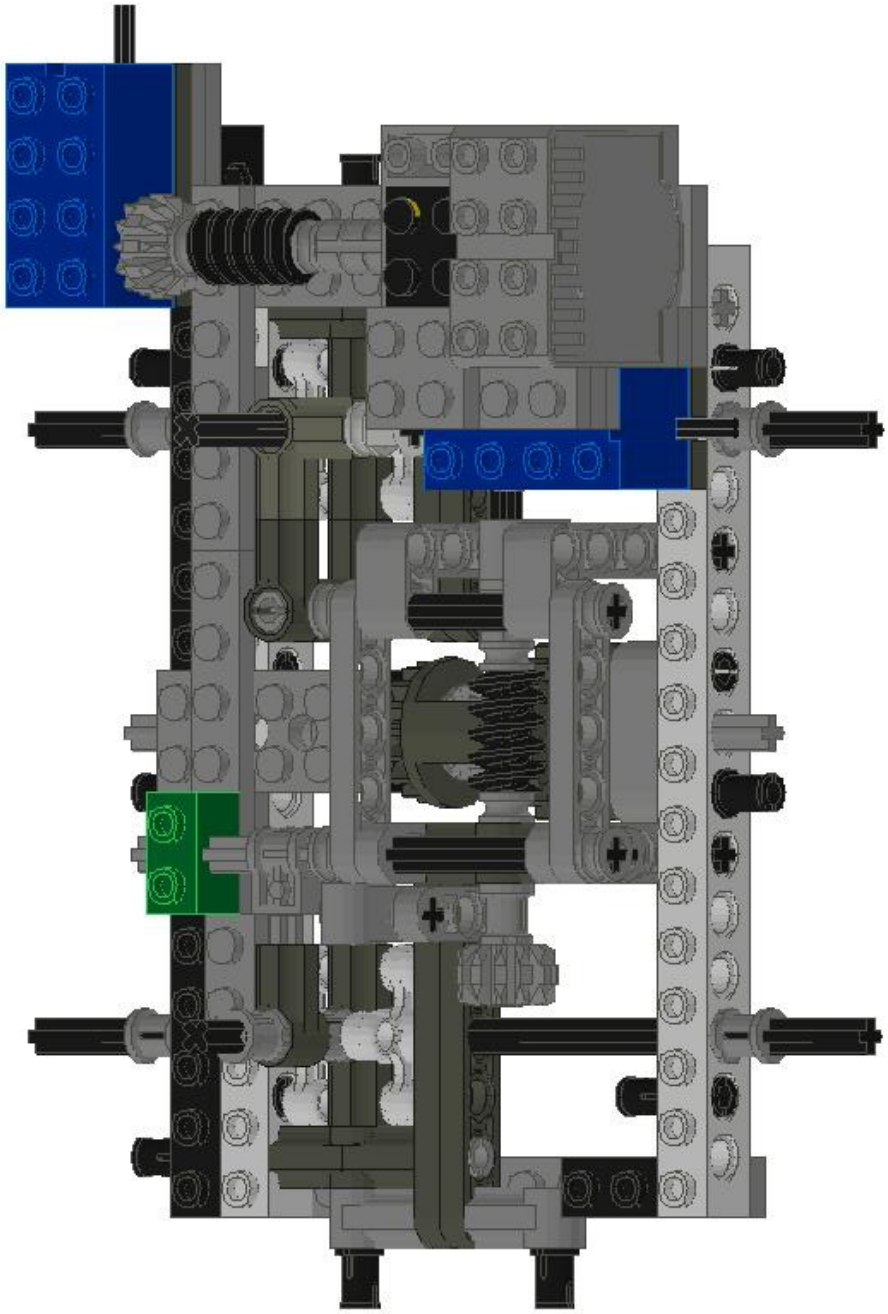

Step 16

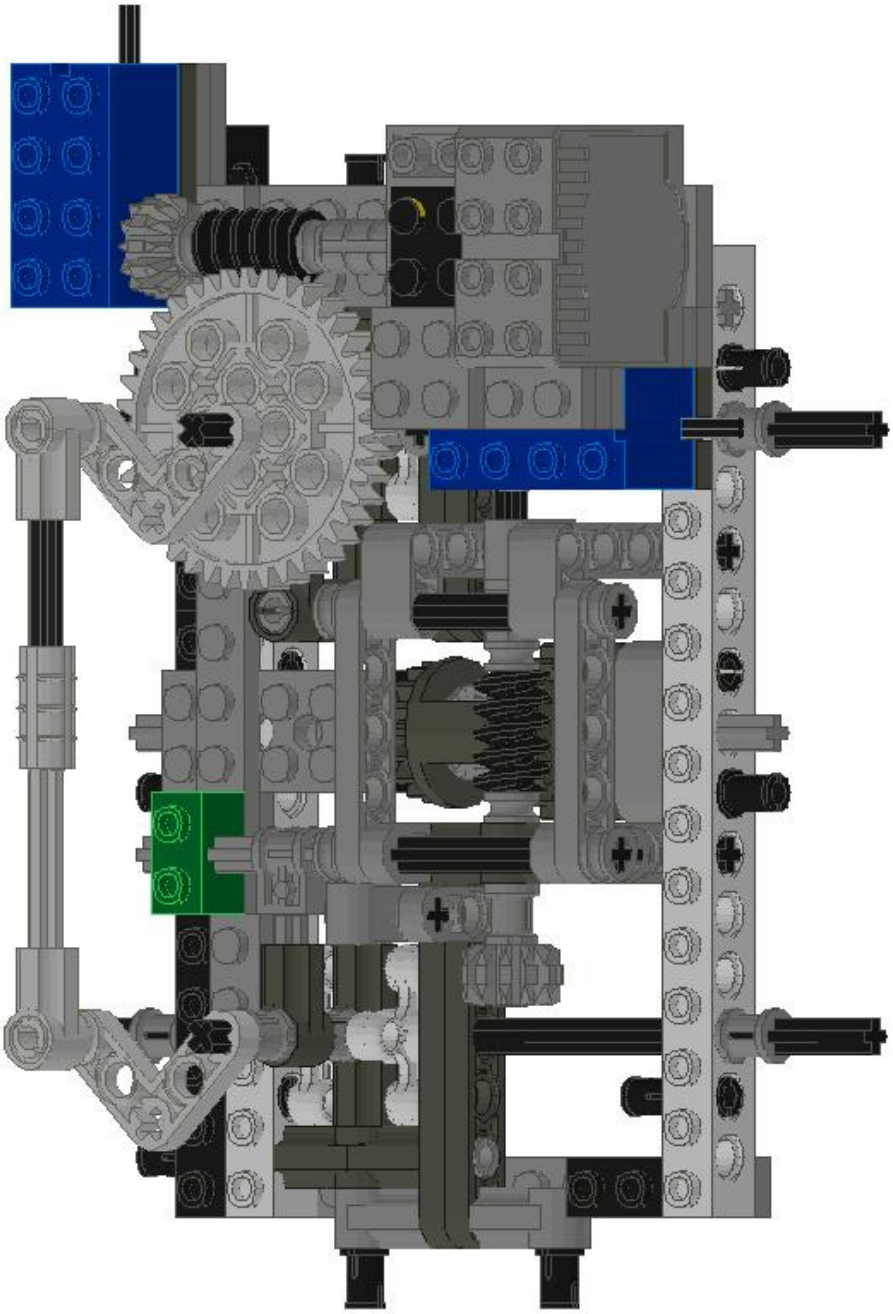

Step 17

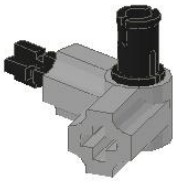

Step 1

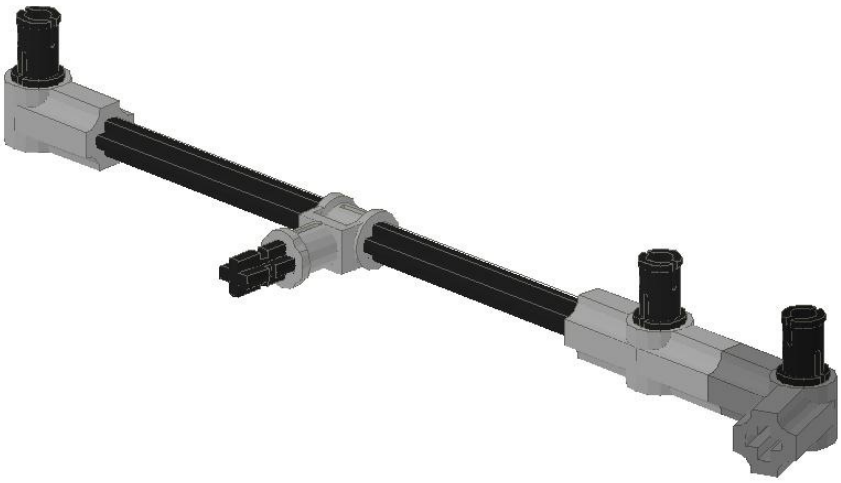

Step 2

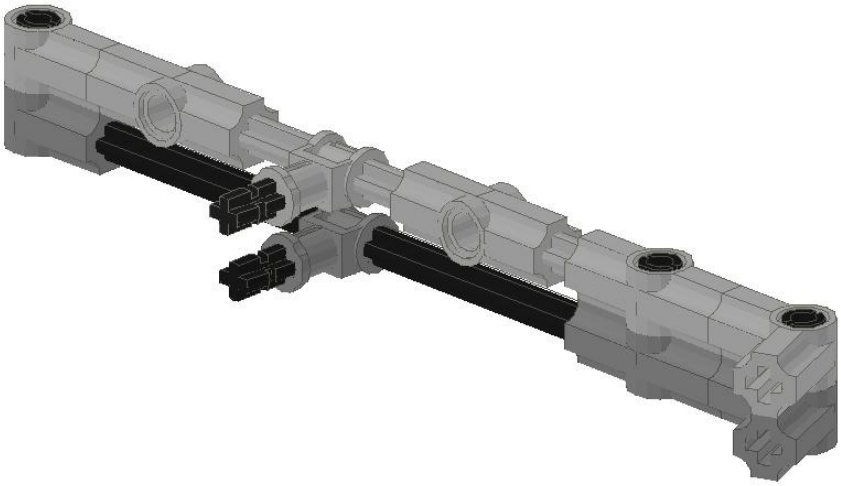

Step 3

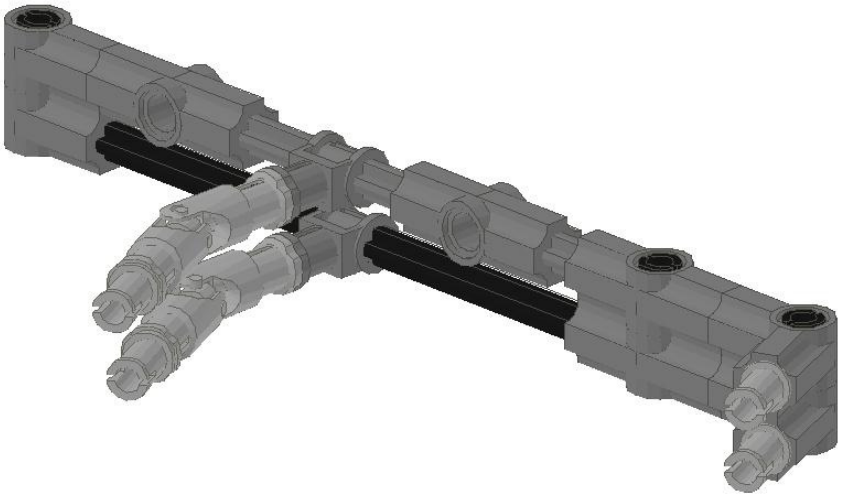

Step 4

Step 1

Step 2

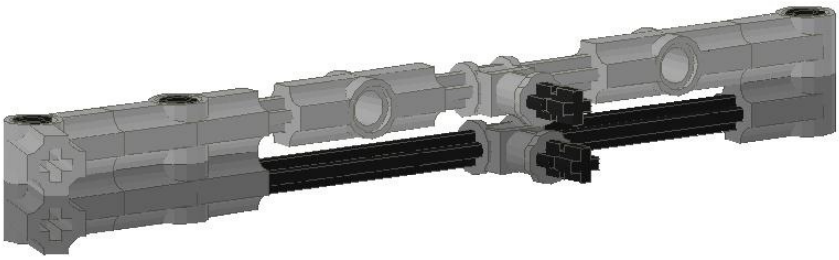

Step 3

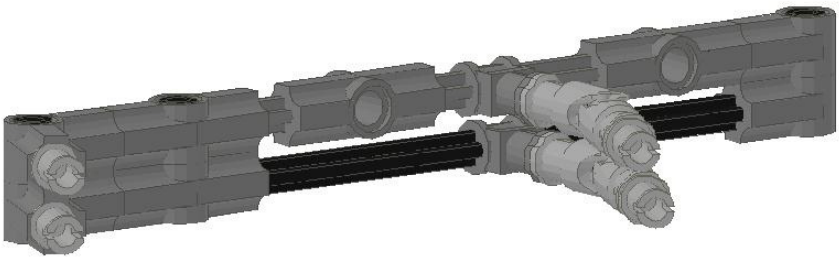

Step 4

Step 1

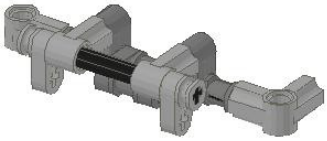

Step 2

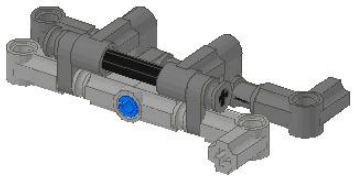

Step 3

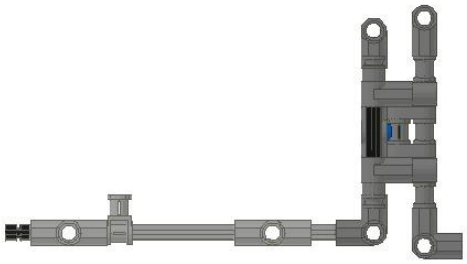

Step 4

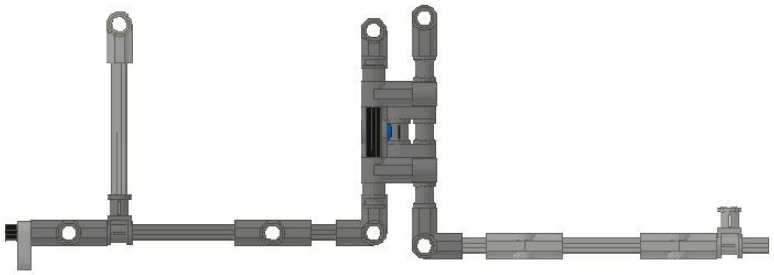

Step 5

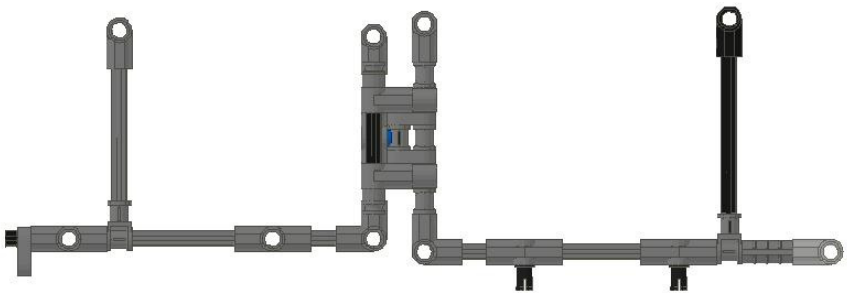

Step 6

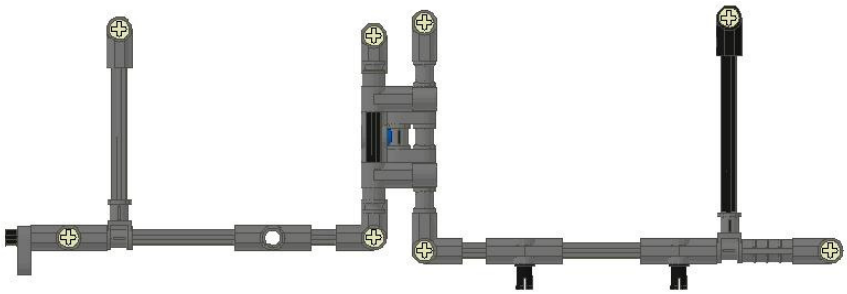

Step 7

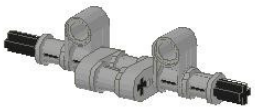

Step 1

Step 2

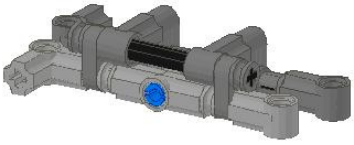

Step 3

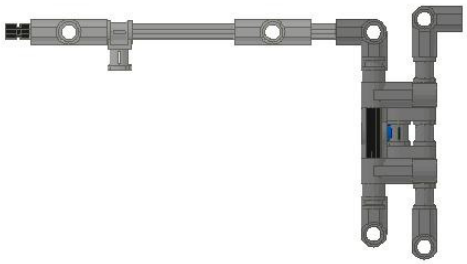

Step 4

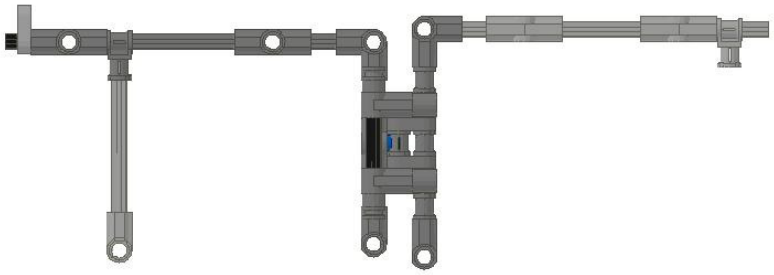

Step 5

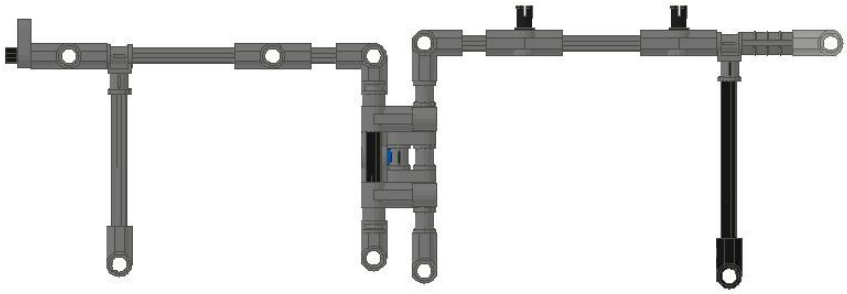

Step 6

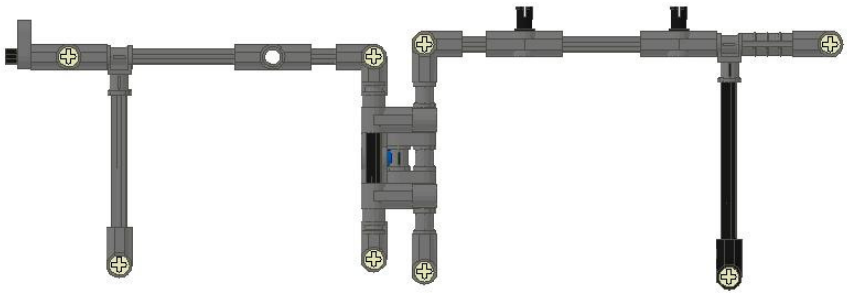

Step 7

Step 1

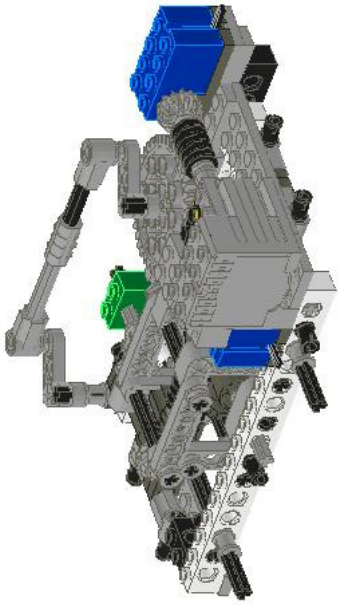

Step 1

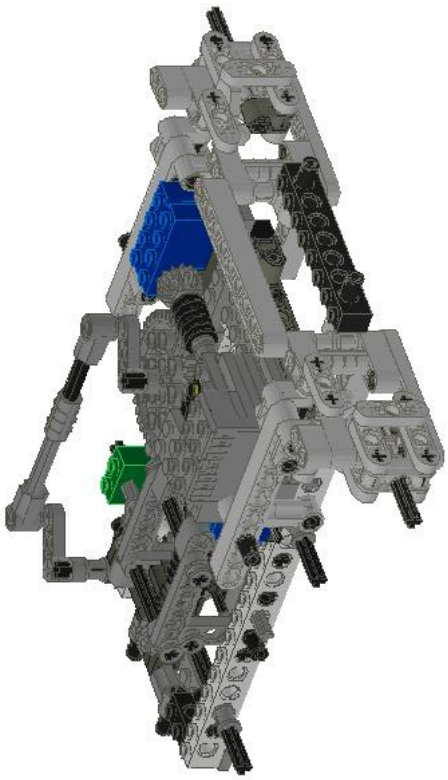

Step 2

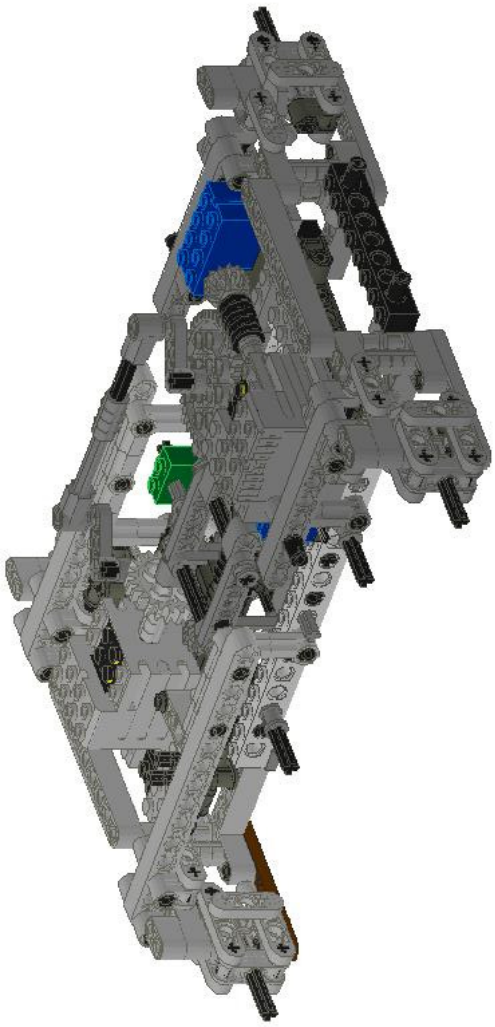

Step 3

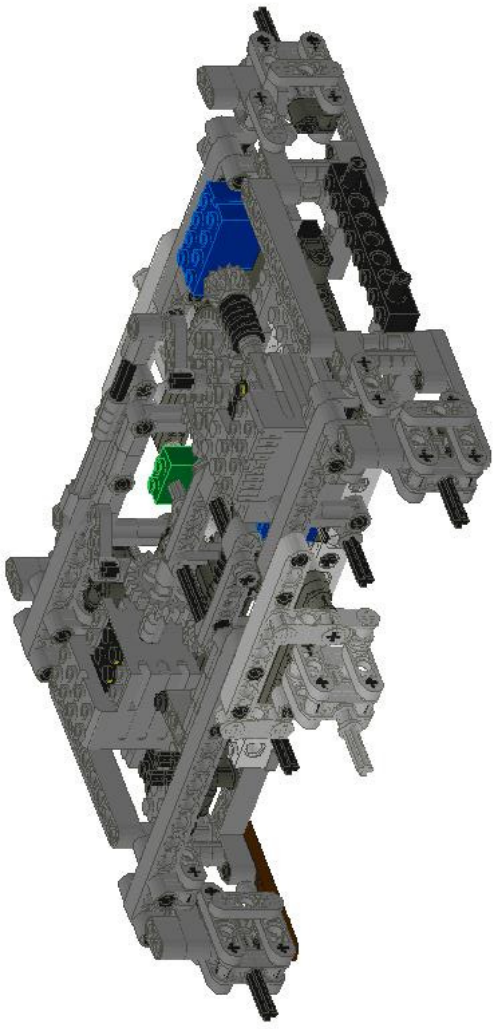

Step 4

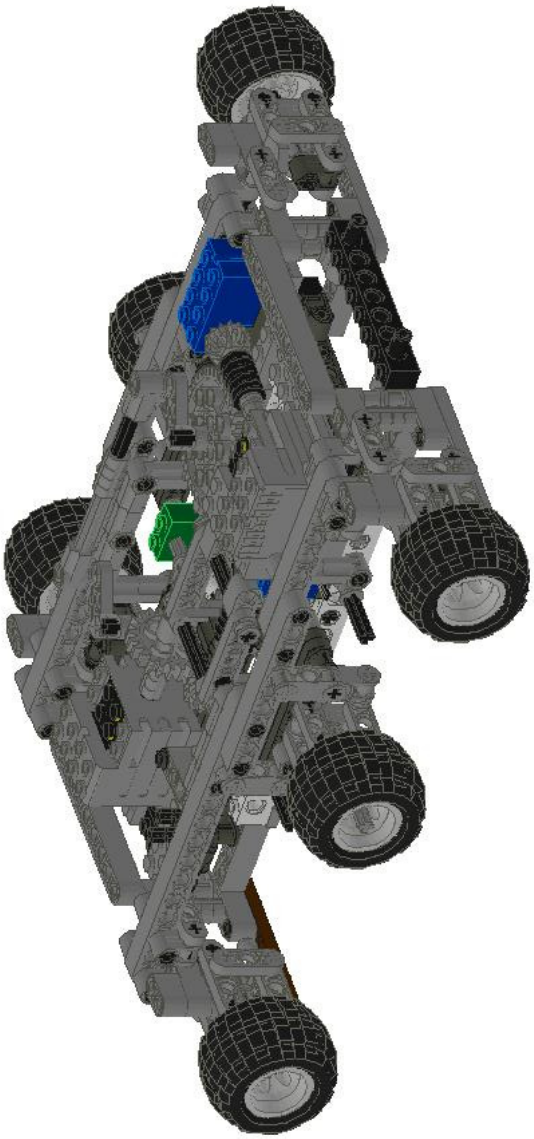

Step 5

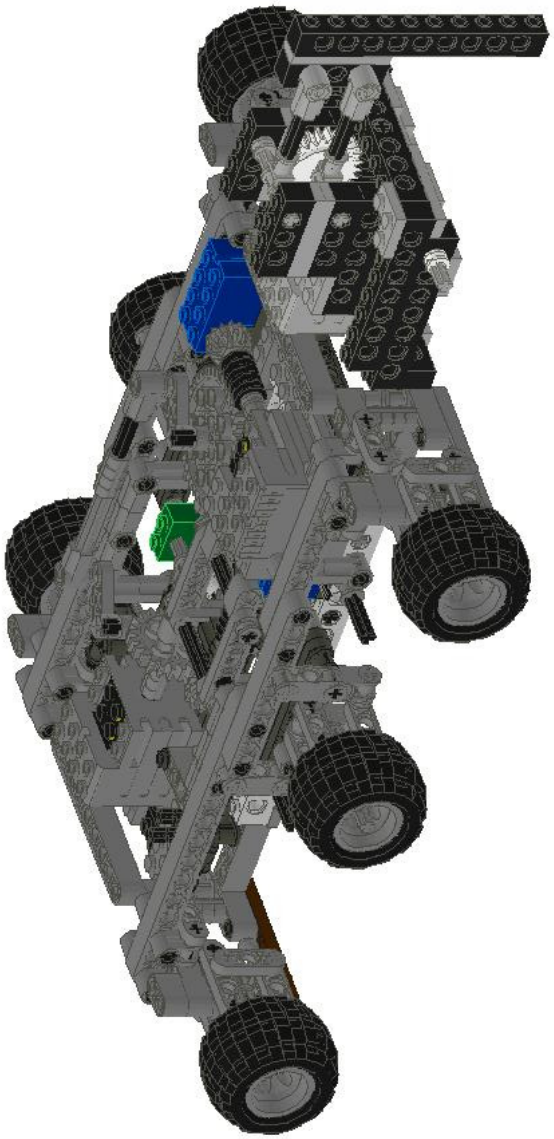

Step 6

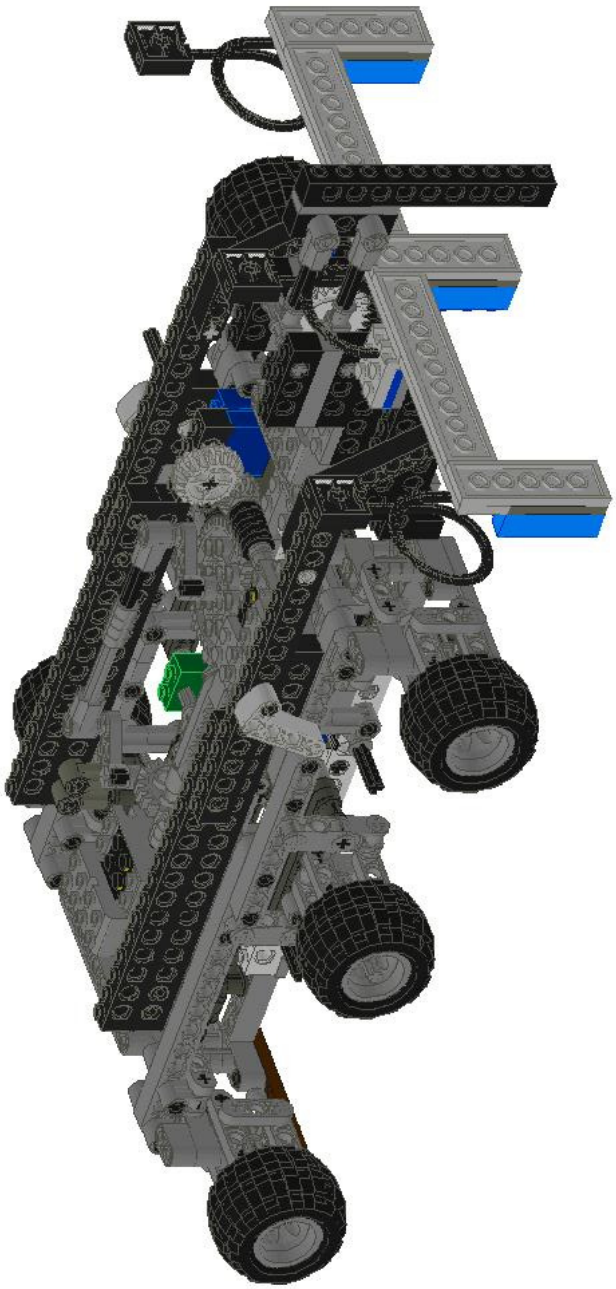

Step 7

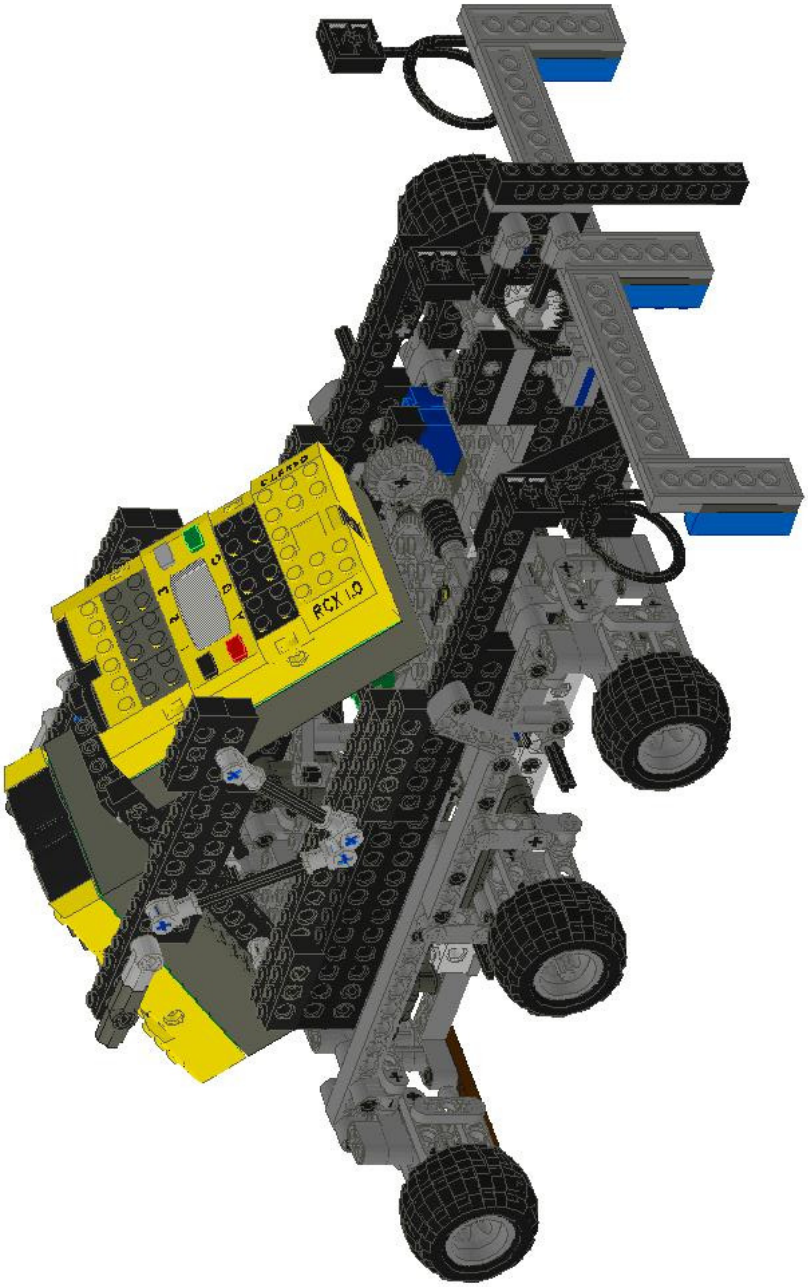

Step 8

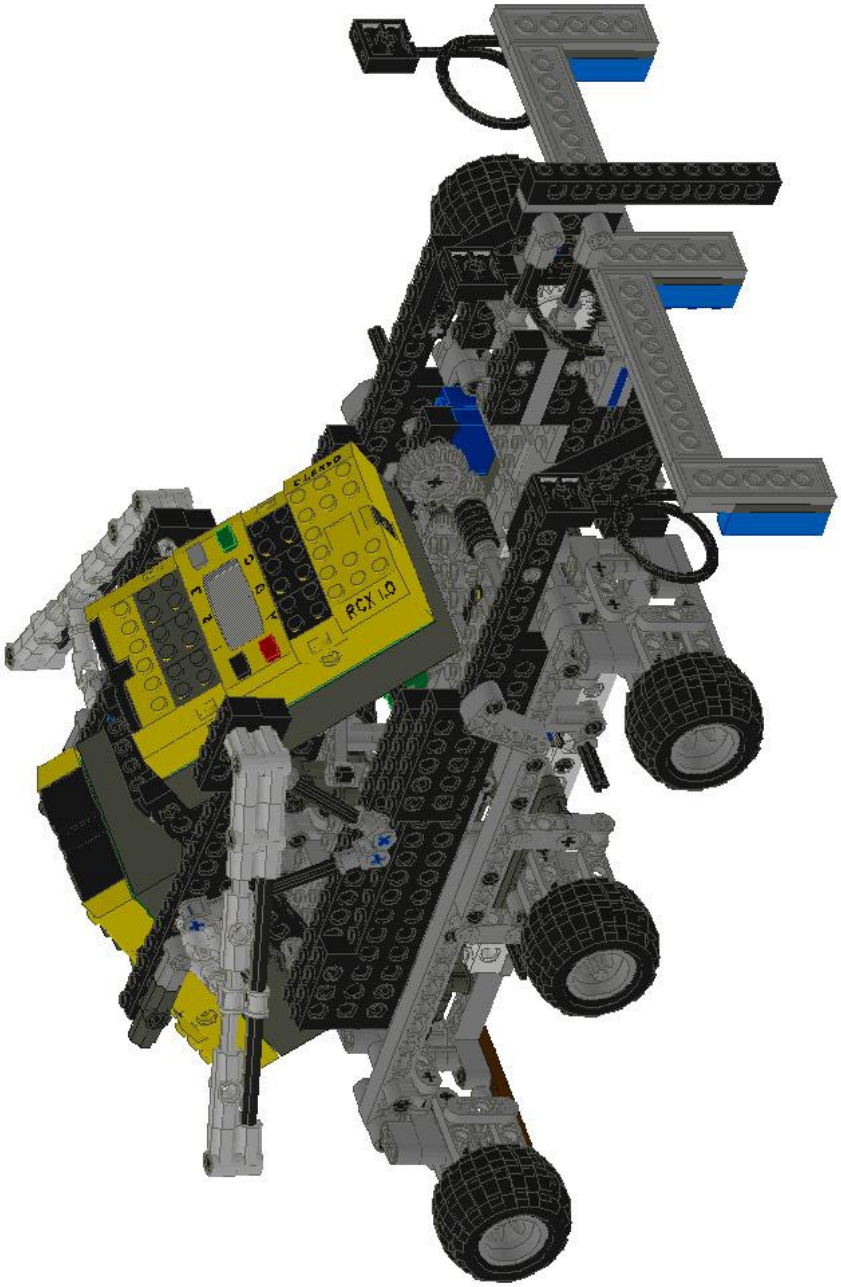

Step 9

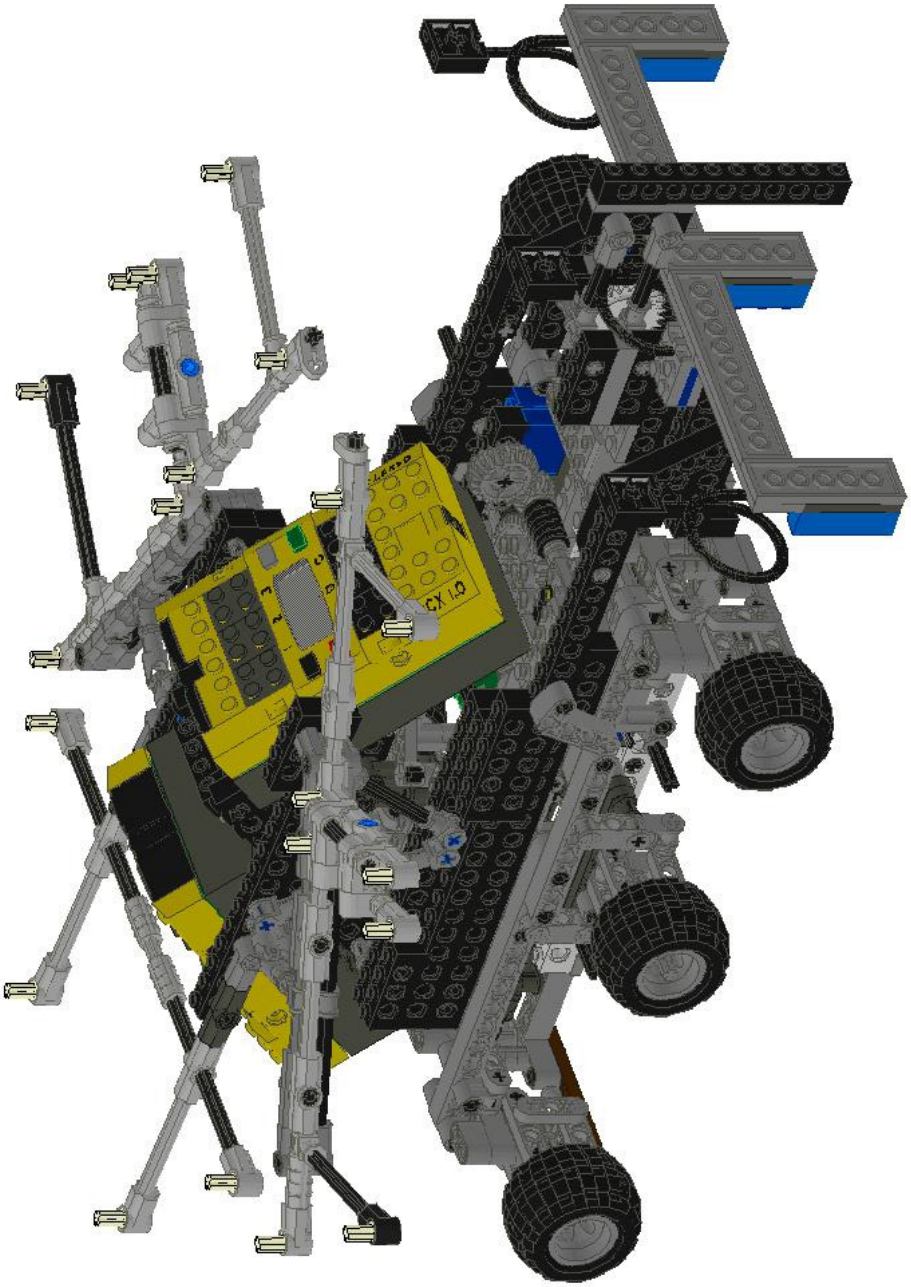

Step 10

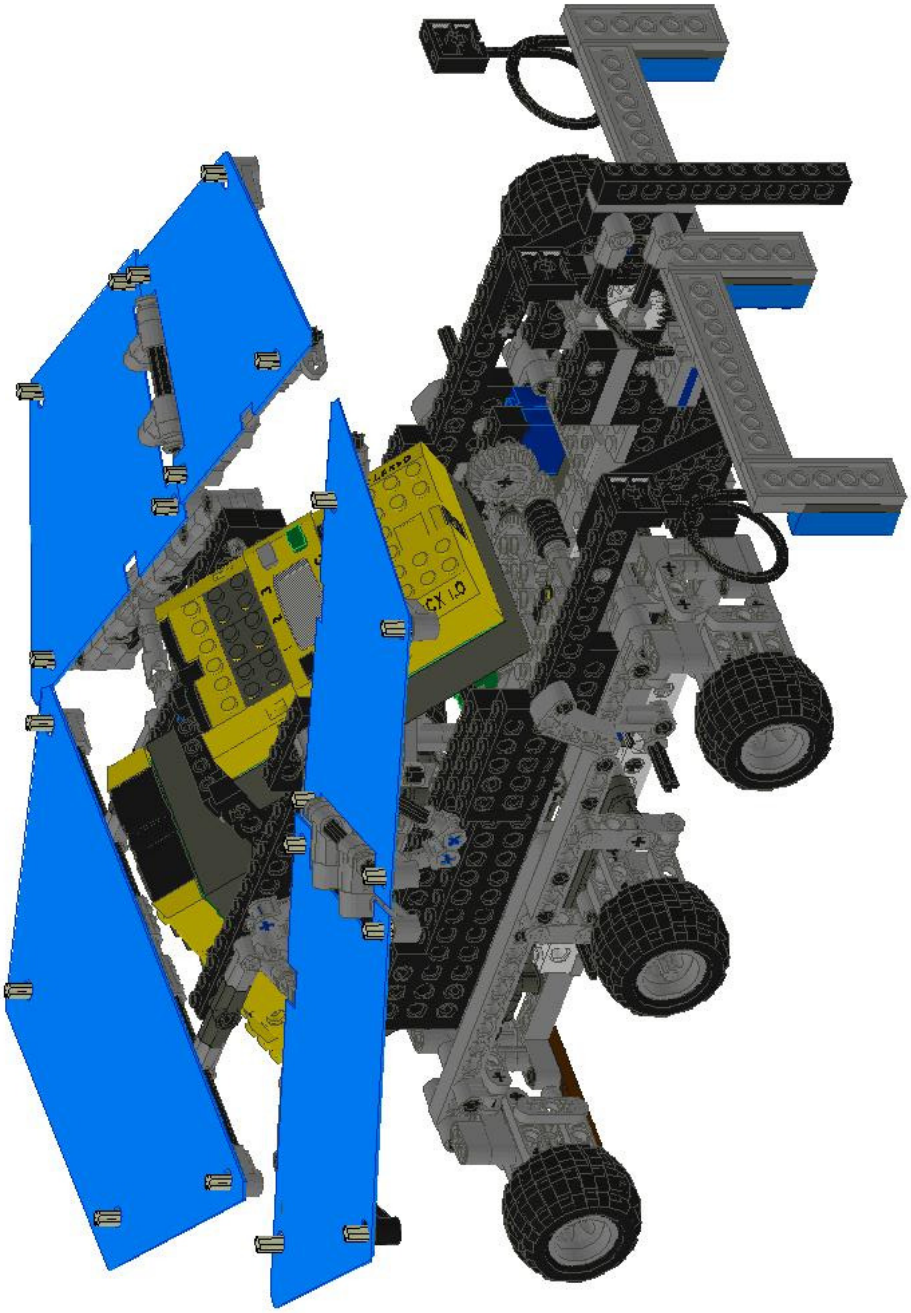

Step 11